STATE OF NORTH CAROLINA
DEPARTMENT OF TRANSPORTATION
HIGHWAY DIVISION 4

PROPOSAL

DATE AND TIME OF BID OPENING: December 8, 2026 AT 2:00 PM

CONTRACT ID: DD00548

WBS ELEMENT NO.: 50976.3.23

FEDERAL AID NO.: 5097623

COUNTY: JOHNSTON COUNTY

TIP NO.: HS-2404V

MILES: 0.683

ROUTE NO.: US-70

LOCATION: MARKET STREET FROM FRONT STREET TO BRIGHTLEAF BOULEVARD

TYPE OF WORK: PAVING AND SIGNALS

NOTICE:

ALL BIDDERS SHALL COMPLY WITH ALL APPLICABLE LAWS REGULATING THE PRACTICE OF GENERAL CONTRACTING AS CONTAINED IN CHAPTER 87 OF THE GENERAL STATUTES OF NORTH CAROLINA WHICH REQUIRES THE BIDDER TO BE LICENSED BY THE N.C. LICENSING BOARD FOR CONTRACTORS WHEN BIDDING ON ANY NON-FEDERAL AID PROJECT WHERE THE BID IS $40,000 OR MORE, EXCEPT FOR CERTAIN SPECIALTY WORK AS DETERMINED BY THE LICENSING BOARD. BIDDERS SHALL ALSO COMPLY WITH ALL OTHER APPLICABLE LAWS REGULATING THE PRACTICES OF ELECTRICAL, PLUMBING, HEATING AND AIR CONDITIONING AND REFRIGERATION CONTRACTING AS CONTAINED IN CHAPTER 87 OF THE GENERAL STATUTES OF NORTH CAROLINA. NOTWITHSTANDING THESE LIMITATIONS ON BIDDING, THE BIDDER WHO IS AWARDED ANY FEDERAL - AID FUNDED PROJECT SHALL COMPLY WITH CHAPTER 87 OF THE GENERAL STATUTES OF NORTH CAROLINA FOR LICENSING REQUIREMENTS WITHIN 60 CALENDAR DAYS OF BID OPENING.

THIS IS A ROADWAY PROJECT. **BID BOND IS REQUIRED.**

_____

NAME OF BIDDER

_____

ADDRESS OF BIDDER

PROPOSAL FOR THE CONSTRUCTION OF
CONTRACT No. DD00548 IN JOHNSTON COUNTY, NORTH CAROLINA
DEPARTMENT OF TRANSPORTATION,
WILSON, NORTH CAROLINA

The Bidder has carefully examined the location of the proposed work to be known as Contract No. **DD00548**; has carefully examined the plans and specifications, which are acknowledged to be part of the proposal, the special provisions, the proposal, the form of contract, and the forms of contract payment bond and contract performance bond; and thoroughly understands the stipulations, requirements and provisions. The undersigned bidder agrees to bound upon his execution of the bid and subsequent award to him by the Department of Transportation in accordance with this proposal to provide the necessary contract payment bond and contract performance bond within fourteen days after the written notice of award is received by him. The undersigned Bidder further agrees to provide all necessary machinery, tools, labor, and other means of construction; and to do all the work and to furnish all materials, except as otherwise noted, necessary to perform and complete the said contract in accordance with the *2024 Standard Specifications for Roads and Structures* by the dates(s) specified in the Project Special Provisions and in accordance with the requirements of the Engineer, and at the unit or lump sum prices, as the case may be, for the various items given on the sheets contained herein.

The Bidder shall provide and furnish all the materials, machinery, implements, appliances and tools, and perform the work and required labor to construct and complete Contract No. **DD00548** in **Johnston County**, for the unit or lump sum prices, as the case may be, bid by the Bidder in his bid and according to the proposal, plans, and specifications prepared by said Department, which proposal, plans, and specifications show the details covering this project, and hereby become a part of this contract.

The published volume entitled *North Carolina Department of Transportation, Raleigh, Standard Specifications for Roads and Structures, January 2024* with all amendments and supplements thereto, is by reference incorporated into and made a part of this contract; that, except as herein modified, all the construction and work included in this contract is to be done in accordance with the specifications contained in said volume, and amendments and supplements thereto, under the direction of the Engineer.

If the proposal is accepted and the award is made, the contract is valid only when signed either by the Contract Officer or such other person as may be designated by the Secretary to sign for the Department of Transportation. The conditions and provisions herein cannot be changed except over the signature of the said Contract Officer or Division Engineer.

The quantities shown in the itemized proposal for the project are considered to be approximate only and are given as the basis for comparison of bids. The Department of Transportation may increase or decrease the quantity of any item or portion of the work as may be deemed necessary or expedient.

An increase or decrease in the quantity of an item will not be regarded as sufficient ground for an increase or decrease in the unit prices, nor in the time allowed for the completion of the work, except as provided for the contract.

Accompanying this bid is a bid bond secured by a corporate surety, or certified check payable to the order of the Department of Transportation, for five percent of the total bid price, which deposit is to be forfeited as liquidated damages in case this bid is accepted and the Bidder shall fail to provide the required payment and performance bonds with the Department of Transportation, under the condition of this proposal, within 14 calendar days after the written notice of award is received by him, as provided in the *Standard Specifications*; otherwise said deposit will be returned to the Bidder.

TABLE OF CONTENTS

COVER SHEET
PROPOSAL SHEET

PROJECT SPECIAL PROVISIONS

NOTE TO CONTRACTOR: G-1
BOND REQUIREMENTS: G-1
HAUL ROADS: G-1
DOMESTIC MATERIAL: G-1
CONTRACT TIME AND LIQUIDATED DAMAGES: G-5
INTERMEDIATE CONTRACT TIME NUMBER 1 AND LIQUIDATED DAMAGES: G-6
INTERMEDIATE CONTRACT TIME NUMBER 2 AND LIQUIDATED DAMAGES: G-6
INTERMEDIATE CONTRACT TIME NUMBER 3 AND LIQUIDATED DAMAGES: G-6
INTERMEDIATE CONTRACT TIME NUMBER 4 AND LIQUIDATED DAMAGES: G-7
INTERMEDIATE CONTRACT TIME NUMBER 5 AND LIQUIDATED DAMAGES: G-7
NO MAJOR CONTRACT ITEMS: G-8
SPECIALTY ITEMS: G-8
FUEL PRICE ADJUSTMENT: G-8
DISADVANTAGED BUSINESS ENTERPRISE (DIVISIONS): G-10
CERTIFICATION FOR FEDERAL-AID CONTRACTS: G-23
RESTRICTIONS ON ITS EQUIPMENT AND SERVICES: G-24
USE OF UNMANNED AIRCRAFT SYSTEM (UAS): G-24
EQUIPMENT IDLING GUIDELINES: G-25
U.S. DEPARTMENT OF TRANSPORTATION HOTLINE: G-25
ELECTRONIC BIDDING: G-26

ROADWAY R-1

UNIT PROJECT SPECIAL PROVISIONS

TRAFFIC CONTROL TC-1
UTILITY CONSTRUCTION UC-1
TRAFFIC SIGNALS TS-1

STANDARD SPECIAL PROVISIONS

AVAILABILITY OF FUNDS – TERMINATION OF CONTRACTS SSP-1
NCDOT GENERAL SEED SPECIFICATION FOR SEED QUALITY SSP-2
ERRATA SSP-5
PLANT AND PEST QUARANTINES SSP-8
TITLE VI AND NONDISCRIMINATION: SSP-9
CONTRACT PROVISIONS FOR FEDERAL-AID CONSTRUCTION CONTRACTS SSP-17
ON-THE-JOB TRAINING SSP-30
MINIMUM WAGES SSP-33

PROPOSAL ITEM SHEETS AND DOT SIGNATURE SHEET

INSTRUCTIONS TO BIDDERS

PLEASE READ ALL INSTRUCTIONS CAREFULLY
BEFORE PREPARING AND SUBMITTING YOUR BID.

All bids shall be prepared and submitted in accordance with the following requirements. Failure to comply with any requirement may cause the bid to be considered irregular and may be grounds for rejection of the bid.

For preparing and submitting the bid electronically, refer to Subarticle 102-8(B) of the *Standard Specifications.*

Bidders that bid electronically on Raleigh Central-Let projects will need a separate request to bid from the approved electronic bidding website for Division Contracts.

ELECTRONIC ON-LINE BID:

1. Plans and the proposal can be found on the Connect NCDOT website.
2. In accordance with Subarticle 102-8(B)(1) of the *Standard Specifications*, obtain an account and valid Digital Signature to bid with Bid Express (bidx.com)
3. In accordance with Subarticle 102-8(B)(3) of the *Standard Specifications*, if bid bond is required and bid deposit is not chosen register bond with Surety2000 or Tinubu and submit with the online bid.
4. In accordance with Article 102-3 of the *Standard Specifications*, registration on the Interested Parties List is required unless SP1 G02 Interested Parties List Not Required provision is included in the proposal.
5. Prepare and submit a bid electronically using the approved electronic bidding provider website.
6. Electronic bidding website necessary for electronic bidding can be found on the Bid Express website following the directions at: https://connect.ncdot.gov/letting/Pages/Electronic-Bidding.aspx.
7. Questions should be emailed 7 calendar days prior to the bid opening to **Vickie P. Gardner** at **vpgardner@ncdot.gov**. Contact with any other NCDOT personnel concerning this project is strictly prohibited, unless otherwise noted, and may result in bids being considered non-responsive.

PROJECT SPECIAL PROVISIONS

GENERAL

NOTE TO CONTRACTOR:

There are materials and/or equipment included in the Project plans and proposal which are typically long-lead time items. The Contractor shall prioritize procuring any long-lead items to maintain the project schedule. The Contractor shall order these materials as soon as possible after contract execution.

BOND REQUIREMENTS:

(6-1-16)(Rev.1-16-24) 102-8, 102-10 SPD 01-420A

A Bid Bond is required in accordance with Article 102-10 of the *Standard Specifications for Roads and Structures.*

Contract Payment and Performance Bonds are required in accordance with Article 103-7 of the *Standard Specifications*.

HAUL ROADS:

(7-16-24) 105 SP1 G04

Revise the *Standard Specifications* as follows:

Page 1-45, Article 105-15 RESTRICTION OF LOAD LIMITS, line 31, add the following after second sentence of the second paragraph:

At least 30 days prior to use, the Contractor shall notify the Engineer of any public road proposed for use as a haul road for the project.

DOMESTIC MATERIAL:

(11-15-22)(Rev. 11-17-26) 106 SP1 G05 D

Revise the *Standard Specifications* as follows:

Page 1-47 and 1-48, Article 106-1 GENERAL REQUIREMENTS, lines 30-47 and 1-49, delete and replace Article 106-1 with the following:

106-1 MATERIALS AND MANUFACTURING

(A) General Requirements

The Contractor shall furnish materials that conform to all contract requirements, are suitable for their intended use, and are free from defects. All materials used in the work shall meet the requirements of the contract and shall be subject to inspection, test, or rejection by the Engineer. All materials permanently incorporated into the completed work shall be new, unless otherwise specified in the contract or as approved by the Engineer.

The Contractor is responsible for selecting, procuring, and delivering materials of the types and quantities necessary to perform the work and meet contract requirements. Delays in material delivery or quality control do not relieve the Contractor of obligations for schedule or quality.

All materials incorporated into the work shall be approved before use. Approval is based on testing, certification, or both, as required by the contract. Department review or acceptance does not relieve the Contractor of responsibility for material compliance. The Department may inspect, sample, and test materials at any time before, during, or after installation.

Materials shall be handled, stored, and protected to prevent damage, contamination, or deterioration. Materials determined to be defective, damaged, contaminated, or otherwise not in compliance shall be rejected and promptly removed from the project.

To facilitate inspection and testing, the Contractor shall furnish a complete statement of origin for all materials, including certifications or samples when requested. This information shall be submitted to the Materials and Tests Unit when required by the contract or as directed by the Engineer, in advance of fabrication, shipment, or use to allow for appropriate inspection.

The Contractor shall furnish Safety Data Sheets (SDS) for all paints and hazardous chemicals proposed for use on the project, in accordance with the North Carolina Hazard Communication Standard, 29 CFR 1910.1200 and NCGS § 95-174.

The Contractor shall provide access, equipment, means and assistance for the verification and calibration of any devices used in testing, measurement, or documentation of materials.

If the Contractor proposes to use materials from local deposits not identified in the contract, the Contractor shall be responsible for preliminary sampling, source approval, and production of acceptable material. Preliminary samples shall be furnished at no cost to the Department. If requested in writing, the Department may perform sampling, with costs to be charged to the Contractor as determined by the Engineer.

Sampling or testing by the Department does not constitute pre-approval or acceptance of material. The Contractor remains responsible for ensuring quality and uniformity of all materials produced or delivered, including those from local deposits. The Contractor shall indemnify and hold harmless the Department from any claims, costs, or damages related to the development or use of such sources, including, but not limited to, failure to meet quantity or quality requirements.

Materials covered by Subarticles 106-1(B) and 106-1(C) shall comply with applicable domestic content requirements, including those for iron and steel, construction materials, and manufactured products.

(B) Domestic Material Requirements

Domestic material requirements apply to iron and steel products permanently incorporated into any project in accordance with 23 U.S.C. § 313, 23 CFR 635.410, and NCGS § 136-28.7. Construction materials and manufactured products permanently incorporated into the

work are subject to domestic-content requirements only on Federal-aid projects, in accordance with 23 U.S.C. § 313, Build America Buy America Act (IIJA § 70914), 2 CFR 184, and as implemented for the Federal-aid highway program through 23 CFR Part 635.410.

All iron or steel products, construction materials, and manufactured products subject to domestic content requirements shall be of domestic origin and meet the applicable requirements of the contract based on the project's funding source.

Before any materials are delivered to the project, the Contractor shall submit a notarized letter acknowledging their understanding of the domestic material requirements for the specific contract. This acknowledgment is a contract-level affirmation that the Contractor is responsible for ensuring that no iron or steel product, construction material, or manufactured product subject to domestic content requirements is permanently incorporated into the work without the required certification. This acknowledgment does not substitute for product-level certifications from the manufacturer or supplier. The Department reserves the right to deny or recover payment for any material incorporated into the work without valid documentation.

For iron and steel, all manufacturing processes must occur in the United States.

For construction materials, all manufacturing processes must occur in the United States.

For manufactured products, final assembly must occur in the United States.

Before any iron or steel product, construction material, or manufactured product subject to domestic content requirements is eligible for payment, the Contractor shall submit a certification from the manufacturer or supplier confirming compliance with the applicable regulations. A separate certification is required for each shipment or delivery and must clearly identify the items covered, linked to the associated bill of lading, invoice, or packing list.

The Contractor shall ensure that all required certifications from the manufacturer or supplier are obtained and submitted to the Engineer prior to payment for any iron or steel product, construction material, or manufactured product subject to domestic content requirements. The Engineer will retain documentation in accordance with Department procedures. Compliance with domestic material requirements is the responsibility of the Contractor, based on certifications and documentation provided by the manufacturer or supplier.

(C) Material Category Requirements

(1) Iron and Steel Products

Items are considered iron or steel products if they consist wholly or predominantly of iron or steel. Predominantly means the cost of iron or steel components exceeds 50% of the total cost of all product components.

All steel and iron products that are permanently incorporated into the work shall be produced in the United States. This includes any such item that is melted, cast, rolled, formed, shaped, drawn, extruded, forged, fabricated, finished or otherwise processed in the manufacture of the product. Coatings applied to iron and steel products shall also be applied in the United States.

A minimal amount of foreign iron or steel products may be permitted provided the total value of such foreign material, as delivered to the project, does not exceed 0.1% of the total contract cost or $2,500, whichever is greater. Documentation establishing the value of the foreign material shall be submitted when requested. This allowance is intended only for incidental quantities that may arise despite good-faith compliance efforts and may not be used to intentionally procure foreign iron or steel.

Domestically produced high-strength fasteners are required, and foreign-produced high-strength fasteners are not permitted under any circumstance.

Raw materials such as pig iron, processed pelletized iron ore, and reduced iron ore may be sourced internationally; however, all manufacturing processes to produce the final product, including coatings, must occur within the United States.

(2) Construction Materials

Construction materials shall consist of a single, listed material type permanently incorporated into the work as defined in 2 CFR 184.3. The following are classified as construction materials:

(a) Non-ferrous metals (such as aluminum, copper, and zinc);
(b) Plastic and polymer-based products (including polyvinylchloride, composite building materials, and polymers used in fiber optic cables);
(c) Glass (including optical glass);
(d) Fiber optic cable (including drop cable);
(e) Optical fiber;
(f) Lumber;
(g) Engineered wood;
(h) Drywall

For construction materials, all manufacturing processes must occur in the United States. If a construction material is combined with other materials, components, or features to form a product with new properties or functions, it shall be classified as a manufactured product.

Minor additions such as binding agents, dyes, or adhesives that do not materially alter the item's properties do not affect classification.

(3) Manufactured Products

Manufactured products are articles, materials, or supplies that are made by combining one or more materials to create a product with new or different properties, functions, or uses. This includes items that incorporate multiple components, materials, or assemblies and cannot be classified as a single listed construction material.

Final assembly of all manufactured products must occur in the United States. Certification must address the product as a whole, including all incorporated components.

Items that meet the definition of construction materials or iron and steel products shall not be reclassified as manufactured products.

(4) Materials Not Subject to Domestic Content Requirements

The following materials are not subject to domestic content requirements and do not require certification, as identified below:

(a) Materials Excluded by Federal Statute or Regulation

The following materials are excluded from domestic content requirements under applicable Federal law or regulation:

(i) Cement and cementitious materials
(ii) Aggregates such as stone, sand, or gravel
(iii) Aggregate binding agents or additives

(b) Materials Not Permanently Incorporated into the Work

Materials that are not permanently incorporated into the completed project are not subject to domestic content requirements. Materials are not permanently incorporated when they are used solely to facilitate construction activities and do not perform an ongoing structural, operational, or functional role after construction is complete. Determinations regarding whether a material is permanently incorporated will be made by the Engineer.

(D) Classification and Clarification of Materials

All items subject to domestic content requirements shall be classified as either an iron or steel product, construction material, manufactured product, or a material not subject to domestic content requirements based on their final form as delivered to the project site. Each item may be classified into only one category and shall not be reclassified to avoid more stringent requirements. Classification of a manufactured product does not relieve the Contractor of compliance with iron and steel domestic manufacturing requirements applicable to embedded iron or steel components when required by Federal law or regulation. When an item's classification is uncertain or does not clearly fall within the listed categories, the Contractor shall submit the item for review by the Engineer. Approval must be obtained prior to procurement or incorporation into the project.

CONTRACT TIME AND LIQUIDATED DAMAGES:
(7-1-95) (Rev. 12-18-07) 108 SP1 G10 A

The date of availability for this contract is **February 1, 2027**.

The completion date for this contract is **August 6, 2027**.

Except where otherwise provided by the contract, observation periods required by the contract will not be a part of the work to be completed by the completion date and/or intermediate contract times stated in the contract. The acceptable completion of the observation periods that extend beyond the final completion date shall be a part of the work covered by the performance and payment bonds.

The liquidated damages for this contract are **One Thousand Six Hundred Dollars ($1,600.00)** per calendar day.

INTERMEDIATE CONTRACT TIME NUMBER 1 AND LIQUIDATED DAMAGES:
(9-21-21) 108 SP1 G14 M

For each curb ramp location on a continuous pedestrian facility, the Contractor shall complete all work required of that curb ramp location as shown in the plans.

The date of availability for each individual intermediate contract time is the date when the Contractor elects to sever the existing continuous pedestrian facility.

The completion date for each individual intermediate contract time is the date which is **seven (7)** consecutive calendar days after and including the date of availability.

For each curb ramp location on a continuous pedestrian facility, the liquidated damages are **Two Hundred and Fifty Dollars ($250.00)** per calendar day.

INTERMEDIATE CONTRACT TIME NUMBER 2 AND LIQUIDATED DAMAGES:
(2-20-07) (Rev. 6-18-13) 108 SP1 G14 F

The Contractor shall complete the work required of **STEP 4.2.1** as shown on Sheet **TMP-3** and shall place and maintain traffic on same.

The time of availability for this intermediate contract time is **any day** at **9:00 P.M.** that the Contractor elects to begin the work.

The completion time for this intermediate contract time is the following **day** at **6:00 A.M.** after the time of availability.

The liquidated damages are **Five Hundred Dollars ($500.00)** per hour.

INTERMEDIATE CONTRACT TIME NUMBER 3 AND LIQUIDATED DAMAGES:
(2-20-07) (Rev. 6-18-13) 108 SP1 G14 F

The Contractor shall complete the work required of **STEP 4.2.2** as shown on Sheet **TMP-3** and shall place and maintain traffic on same.

The time of availability for this intermediate contract time is **any day** at **9:00 P.M.** that the Contractor elects to begin the work.

The completion time for this intermediate contract time is the following **day** at **6:00 A.M.** after the time of availability.

The liquidated damages are **Five Hundred Dollars ($500.00)** per hour.

INTERMEDIATE CONTRACT TIME NUMBER 4 AND LIQUIDATED DAMAGES:
(2-20-07) (Rev. 6-18-13) 108 SP1 G14 F

The Contractor shall complete the work required of **STEP 4.2.3** as shown on Sheet **TMP-3** and shall place and maintain traffic on same.

The time of availability for this intermediate contract time is **any day** at **9:00 P.M.** that the Contractor elects to begin the work.

The completion time for this intermediate contract time is the following **day** at **6:00 A.M.** after the time of availability.

The liquidated damages are **Five Hundred Dollars ($500.00)** per hour.

INTERMEDIATE CONTRACT TIME NUMBER 5 AND LIQUIDATED DAMAGES:
(2-20-07) 108 SP1 G14 A

The Contractor shall complete the required work of installing, maintaining, and removing the traffic control devices for lane closures and restoring traffic to the existing traffic pattern. The Contractor shall not close or narrow a lane of traffic on **US 70 Bus (Market Street), Second Street, Third Street and Johnston Street,** during the following time restrictions:

DAY AND TIME RESTRICTIONS

MONDAY THRU SUNDAY
6:00 A.M. TO 9:00 P.M.

In addition, the Contractor shall not close or narrow a lane of traffic on **US 70 Bus (Market Street), Second Street, Third Street and Johnston Street,** detain and/or alter the traffic flow on or during holidays, holiday weekends, special events, or any other time when traffic is unusually heavy, including the following schedules:

HOLIDAY AND HOLIDAY WEEKEND LANE CLOSURE RESTRICTIONS

1. For **unexpected occurrence** that creates unusually high traffic volumes, as directed by the Engineer.

2. For **New Year's Day,** between the hours of **6:30 a.m.** December 31st and **8:00 p.m.** January 2nd. If New Year's Day is on a Friday, Saturday, Sunday or Monday, then until **8:00 p.m.** the following Tuesday.

3. For Easter, between the hours of **6:30 a.m.** Thursday and **8:00 p.m.** Tuesday.

4. For Memorial Day, between the hours of **6:30 a.m.** Friday and **8:00 p.m.** Wednesday.

5. For **Independence Day**, between the hours of **6:30 a.m.** the Friday before the week of Independence Day and **8:00 p.m.** the following Monday after the week of Independence Day.

6. For **Labor Day**, between the hours of **6:30 a.m.** Friday and **8:00 p.m.** Wednesday.

7. For **Thanksgiving Day**, between the hours of **6:30 a.m.** Tuesday and **8:00 p.m.** Monday.

8. For **Christmas**, between the hours of **6:30 a.m.** the Friday before the week of Christmas Day and **8:00 p.m.** the following Tuesday after the week of Christmas.

Holidays and holiday weekends shall include New Year's, Easter, Memorial Day, Independence Day, Labor Day, Thanksgiving, and Christmas. The Contractor shall schedule his work so that lane closures are not required during these periods, unless otherwise directed by the Engineer.

The time of availability for this intermediate contract work shall be the time the Contractor begins to install all traffic control devices for lane closures according to the time restrictions listed herein.

The completion time for this intermediate contract work shall be the time the Contractor is required to complete the removal of all traffic control devices for lane closures according to the time restrictions stated herein and place traffic in the existing traffic pattern.

The liquidated damages are **One Thousand Dollars ($1,000.00)** per hour.

NO MAJOR CONTRACT ITEMS:
(2-19-02) (Rev. 8-21-07) 104 SP1 G31

None of the items included in this contract will be major items.

SPECIALTY ITEMS:
(7-1-95)(Rev. 1-16-24) 108-6 SP1 G37

Items listed below will be the specialty items for this contract (see Article 108-6 of the *Standard Specifications*).

Line #	**Description**
14 - 19	Signing
23 - 29	Long-Life Pavement Markings
40 - 43	Utility Construction
46 - 66	Signals/ITS System

FUEL PRICE ADJUSTMENT:
(11-15-05)(Rev. 1-16-24) 109-8 SP1 G43

Page 1-82, Article 109-8, FUEL PRICE ADJUSTMENTS, add the following:

The base index price for DIESEL #2 FUEL is **$5.1018** per gallon. Where any of the following are included as pay items in the contract, they will be eligible for fuel price adjustment.

The pay items and the fuel factor used in calculating adjustments to be made will be as follows:

Description	**Units**	**Fuel Usage Factor Diesel**
Unclassified Excavation	Gal/CY	0.29
Borrow Excavation	Gal/CY	0.29
Class IV Subgrade Stabilization	Gal/Ton	0.55
Aggregate Base Course	Gal/Ton	0.55
Sub-Ballast	Gal/Ton	0.55
Erosion Control Stone	Gal/Ton	0.55
Rip Rap, Class _____	Gal/Ton	0.55
Asphalt Concrete Base Course, Type ____	Gal/Ton	0.90 or 2.90
Asphalt Concrete Intermediate Course, Type ____	Gal/Ton	0.90 or 2.90
Asphalt Concrete Surface Course, Type ____	Gal/Ton	0.90 or 2.90
Open-Graded Asphalt Friction Course	Gal/Ton	0.90 or 2.90
Permeable Asphalt Drainage Course, Type ____	Gal/Ton	0.90 or 2.90
Sand Asphalt Surface Course, Type ____	Gal/Ton	0.90 or 2.90
Ultra-thin Bonded Wearing Course	Gal/Ton	0.90 or 2.90
Aggregate for Cement Treated Base Course	Gal/Ton	0.55
Portland Cement for Cement Treated Base Course	Gal/Ton	0.55
> 11" Portland Cement Concrete Pavement	Gal/SY	0.327
Concrete Shoulders Adjacent to > 11” Pavement	Gal/SY	0.327
9” to 11" Portland Cement Concrete Pavement	Gal/SY	0.272
Concrete Shoulders Adjacent to 9” to 11” Pavement	Gal/SY	0.272
< 9” Portland Cement Concrete Pavement	Gal/SY	0.245
Concrete Shoulders Adjacent to < 9” Pavement	Gal/SY	0.245

For the asphalt items noted in the chart as eligible for fuel adjustments, the bidder may include the *Fuel Usage Factor Adjustment Form* with their bid submission if they elect to use the fuel usage factor. The *Fuel Usage Factor Adjustment Form* is found at the following link:

https://connect.ncdot.gov/letting/LetCentral/Fuel%20Usage%20Factor%20Adjustment%20Form%20-%20%20Starting%20Nov%202022%20Lettings.pdf

Select either 2.90 Gal/Ton fuel factor or 0.90 Gal/Ton fuel factor for each asphalt line item on the *Fuel Usage Factor Adjustment Form*. The selected fuel factor for each asphalt item will remain in effect for the duration of the contract.

Failure to complete the *Fuel Usage Factor Adjustment Form* will result in using 2.90 gallons per ton as the Fuel Usage Factor for Diesel for the asphalt items noted above. The contractor will not be permitted to change the Fuel Usage Factor after the bids are submitted.

DISADVANTAGED BUSINESS ENTERPRISE (DIVISIONS):
(10-16-07)(Rev. 10-21-25) 102-15(J) SP1 G62

Description

The purpose of this Special Provision is to carry out the U.S. Department of Transportation's policy of ensuring nondiscrimination in the award and administration of contracts financed in whole or in part with Federal funds. This provision is guided by 49 CFR Part 26.

Definitions

Additional DBE Subcontractors - Any DBE submitted at the time of bid that will not be used to meet the DBE goal. No submittal of a Letter of Intent is required.

Committed DBE Subcontractor - Any DBE submitted at the time of bid that is being used to meet the DBE goal by submission of a Letter of Intent. Or any DBE used as a replacement for a previously committed DBE firm.

Contract Goal Requirement - The approved DBE participation at time of award, but not greater than the advertised contract goal.

DBE Goal - A portion of the total contract, expressed as a percentage, that is to be performed by committed DBE subcontractor(s).

Disadvantaged Business Enterprise (DBE) - A firm certified as a Disadvantaged Business Enterprise through the North Carolina Unified Certification Program.

Goal Confirmation Letter - Written documentation from the Department to the bidder confirming the Contractor's approved, committed DBE participation along with a listing of the committed DBE firms.

Manufacturer - A firm that owns (or leases) and operates or maintains a factory or establishment that produces on the premises, the materials or supplies obtained by the Contractor. A firm that makes minor modifications to the materials, supplies, articles, or equipment is not a manufacturer.

Regular Dealer - A firm that owns (or leases), and operates a store, warehouse, or other establishment in which the materials or supplies required for the performance of the contract are bought, kept in sufficient quantities, and regularly sold to the public in the usual course of business. A regular dealer engages in, as its principal business and in its own name, the purchase and sale or lease of the products in question. A regular dealer in such bulk items as steel, concrete or concrete products, gravel, stone, asphalt and petroleum products need not keep such products in stock, if it owns and operates distribution equipment for the products. Any supplement of regular dealers' own distribution equipment shall be by a long-term operating lease and not on an ad hoc or contract-by-contract basis.

Distributor – A firm that engages in the regular sale or lease of the items specified by the contract. A distributor assumes responsibility for the items it purchases once they leave the point of origin (e.g., a manufacturer's facility), making it liable for any loss or damage not covered by the carrier's insurance.

Replacement / Substitution – A full or partial reduction in the amount of work subcontracted to a committed (or an approved substitute) DBE firm.

North Carolina Unified Certification Program (NCUCP) - A program that provides comprehensive services and information to applicants for DBE certification, such that an applicant is required to apply only once for a DBE certification that will be honored by all recipients of USDOT funds in the state and not limited to the Department of Transportation only. The Certification Program is in accordance with 49 CFR Part 26.

United States Department of Transportation (USDOT) - Federal agency responsible for issuing regulations (49 CFR Part 26) and official guidance for the DBE program.

Forms and Websites Referenced in this Provision

DBE Payment Tracking System - On-line system in which the Contractor enters the payments made to DBE subcontractors who have performed work on the project. https://apps.dot.state.nc.us/Vendor/PaymentTracking/

DBE-IS *Subcontractor Payment Information* - Form for reporting the payments made to all DBE firms working on the project. This form is for paper bid projects only. https://connect.ncdot.gov/business/Turnpike/Documents/Form%20DBE-IS%20Subcontractor%20Payment%20Information.pdf

RF-1 *DBE Replacement Request Form* - Form for replacing a committed DBE. https://connect.ncdot.gov/projects/construction/Construction%20Forms/DBE%20MBE%20WBE%20Replacement%20Form%20and%20Instructions.pdf

SAF *Subcontract Approval Form* - Form required for approval to sublet the contract. https://connect.ncdot.gov/projects/construction/Construction%20Forms/SAF%20Form%20-%20Subcontract%20Approval%20Form%20Revised%2004-19.xlsm

JC-1 *Joint Check Notification Form* - Form and procedures for joint check notification. The form acts as a written joint check agreement among the parties providing full and prompt disclosure of the expected use of joint checks. https://connect.ncdot.gov/projects/construction/Construction%20Forms/Joint%20Check%20Notification%20Form.pdf

Letter of Intent - Form signed by the Contractor and the DBE subcontractor, manufacturer or regular dealer that affirms that a portion of said contract is going to be performed by the signed DBE for the estimated amount (based on quantities and unit prices) listed at the time of bid. http://connect.ncdot.gov/letting/LetCentral/Letter%20of%20Intent%20to%20Perform%20as%20a%20Subcontractor.pdf

Listing of DBE Subcontractors Form - Form for entering DBE subcontractors on a project that will meet this DBE goal. This form is for paper bids only. http://connect.ncdot.gov/municipalities/Bid%20Proposals%20for%20LGA%20Content/08%20DBE%20Subcontractors%20(Federal).docx

Subcontractor Quote Comparison Sheet - Spreadsheet for showing all subcontractor quotes in the work areas where DBEs quoted on the project. This sheet is submitted with good faith effort packages.
http://connect.ncdot.gov/business/SmallBusiness/Documents/DBE%20Subcontractor%20Quote%20Comparison%20Example.xls

DBE Regular Dealer/Distributor Affirmation Form – Form is used to make a preliminary counting determination for each DBE listed as a regular dealer or distributor to assess its eligibility for 60 or 40 percent credit, respectively of the cost of materials or supplies based on its demonstrated capacity and intent to perform as a regular dealer or distributor, as defined in section 49 CFR 26.55 under the contract at issue. A Contractor will submit the completed form with the Letter of Intent.
https://connect.ncdot.gov/projects/construction/Construction%20Forms/DBE%20Regular%20Dealer-Distributor%20Affirmation%20Form%20-%20USDOT%202024.pdf

DBE Goal

There is NO goal for participation by Disadvantaged Business Enterprises for this contract.

Directory of Transportation Firms (Directory)

Real-time information is available about firms doing business with the Department and firms that are certified through NCUCP in the Directory of Transportation Firms. Only firms identified in the Directory as DBE certified shall be used to meet the DBE goal. The Directory can be found at the following link.

https://www.ebs.nc.gov/VendorDirectory/default.html

The listing of an individual firm in the directory shall not be construed as an endorsement of the firm's capability to perform certain work.

Listing of DBE Subcontractors

At the time of bid, bidders shall submit all DBE participation that they anticipate to use during the life of the contract. Only those identified to meet the DBE goal will be considered committed, even though the listing shall include both committed DBE subcontractors and additional DBE subcontractors. Additional DBE subcontractor participation submitted at the time of bid will be used toward the Department's overall race-neutral goal. Only those firms with current DBE certification at the time of bid opening will be acceptable for listing in the bidder's submittal of DBE participation. The Contractor shall indicate the following required information:

(A) Electronic Bids

Bidders shall submit a listing of DBE participation in the appropriate section of the electronic submittal file.

(1) Submit the names and addresses of DBE firms identified to participate in the contract. If the bidder uses the updated listing of DBE firms shown in the electronic

submittal file, the bidder may use the dropdown menu to access the name and address of the DBE firm.

(2) Submit the contract line numbers of work to be performed by each DBE firm. When no figures or firms are entered, the bidder will be considered to have no DBE participation.

(3) The bidder shall be responsible for ensuring that the DBE is certified at the time of bid by checking the Directory of Transportation Firms. If the firm is not certified at the time of the bid-letting, that DBE's participation will not count towards achieving the DBE goal.

(B) Paper Bids

(1) *If the DBE goal is more than zero,*

(a) Bidders, at the time the bid proposal is submitted, shall submit a listing of DBE participation, including the names and addresses on *Listing of DBE Subcontractors* contained elsewhere in the contract documents in order for the bid to be considered responsive. Bidders shall indicate the total dollar value of the DBE participation for the contract.

(b) If bidders have no DBE participation, they shall indicate this on the *Listing of DBE Subcontractors* by entering the word "None" or the number "0." This form shall be completed in its entirety. **Blank forms will not be deemed to represent zero participation**. Bids submitted that do not have DBE participation indicated on the appropriate form will not be read publicly during the opening of bids. The Department will not consider these bids for award and the proposal will be rejected.

(c) The bidder shall be responsible for ensuring that the DBE is certified at the time of bid by checking the Directory of Transportation Firms. If the firm is not certified at the time of the bid-letting, that DBE's participation will not count towards achieving the DBE goal.

(2) *If the DBE goal is zero,* entries on the *Listing of DBE Subcontractors* are not required, however any DBE participation that is achieved during the project shall be reported in accordance with requirements contained elsewhere in the special provision.

DBE Prime Contractor

When a certified DBE firm bids on a contract that contains a DBE goal, the DBE firm is responsible for meeting the goal or making good faith efforts to meet the goal, just like any other bidder. In most cases, a DBE bidder on a contract will meet the DBE goal by virtue of the work it performs on the contract with its own forces. However, all the work that is performed by the DBE bidder and any other DBE subcontractors will count toward the DBE goal. The DBE bidder shall list itself along with any DBE subcontractors, if any, in order to receive credit toward the DBE goal.

For example, if the DBE goal is 45% and the DBE bidder will only perform 40% of the contract work, the prime will list itself at 40%, and the additional 5% shall be obtained through additional DBE participation with DBE subcontractors or documented through a good faith effort.

DBE prime contractors shall also follow Sections A or B listed under *Listing of DBE Subcontractor* just as a non-DBE bidder would.

Written Documentation – Letter of Intent

The bidder shall submit written documentation for each DBE that will be used to meet the DBE goal of the contract, indicating the bidder's commitment to use the DBE in the contract. This documentation shall be submitted on the Department's form titled *Letter of Intent*.

The documentation shall be received in the office of the Engineer no later than 2:00 p.m. of the fifth calendar day following opening of bids, unless the fifth day falls on Saturday, Sunday or an official state holiday. In that situation, it is due in the office of the Engineer no later than 10:00 a.m. on the next official state business day.

If the bidder fails to submit the Letter of Intent from each committed DBE to be used toward the DBE goal, or if the form is incomplete (i.e. both signatures are not present), the DBE participation will not count toward meeting the DBE goal. If the lack of this participation drops the commitment below the DBE goal, the Contractor shall submit evidence of good faith efforts, completed in its entirety, to the Engineer no later than 2:00 p.m. on the eighth calendar day following opening of bids, unless the eighth day falls on Saturday, Sunday or an official state holiday. In that situation, it is due in the office of the Engineer no later than 10:00 a.m. on the next official state business day.

Submission of Good Faith Effort

If the bidder fails to meet or exceed the DBE goal the apparent lowest responsive bidder shall submit to the Department documentation of adequate good faith efforts made to reach the DBE goal.

One complete set and one electronic copy **(in .PDF format)** of this information shall be received in the office of the Engineer no later than 2:00 p.m. of the fifth calendar day following opening of bids, unless the fifth day falls on Saturday, Sunday or an official state holiday. In that situation, it is due in the office of the Engineer no later than 10:00 a.m. on the next official state business day.

Note: Where the information submitted includes repetitious solicitation letters, it will be acceptable to submit a representative letter along with a distribution list of the firms that were solicited. Documentation of DBE quotations shall be a part of the good faith effort submittal. This documentation may include written subcontractor quotations, telephone log notations of verbal quotations, or other types of quotation documentation.

Consideration of Good Faith Effort for Projects with DBE Goals More Than Zero

Adequate good faith efforts mean that the bidder took all necessary and reasonable steps to achieve the goal which, by their scope, intensity, and appropriateness, could reasonably be expected to obtain sufficient DBE participation. Adequate good faith efforts also mean that the bidder actively and aggressively sought DBE participation. Mere *pro forma* efforts are not considered good faith efforts.

The Department will consider the quality, quantity, and intensity of the different kinds of efforts a bidder has made. Listed below are examples of the types of actions a bidder will take in making a good faith effort to meet the goal and are not intended to be exclusive or exhaustive, nor is it intended to be a mandatory checklist.

(A) Soliciting through all reasonable and available means (e.g. attendance at pre-bid meetings, advertising, written notices, use of verifiable electronic means through the use of the NCDOT Directory of Transportation Firms) the interest of all certified DBEs who have the capability to perform the work of the contract. The bidder must solicit this interest within at least 10 days prior to bid opening to allow the DBEs to respond to the solicitation. Solicitation shall provide the opportunity to DBEs within the Division and surrounding Divisions where the project is located. The bidder must determine with certainty if the DBEs are interested by taking appropriate steps to follow up initial solicitations.

(B) Selecting portions of the work to be performed by DBEs in order to increase the likelihood that the DBE goals will be achieved.

(1) Where appropriate, break out contract work items into economically feasible units to facilitate DBE participation, even when the prime contractor might otherwise prefer to perform these work items with its own forces.

(2) Negotiate with subcontractors to assume part of the responsibility to meet the contract DBE goal when the work to be sublet includes potential for DBE participation (2nd and 3rd tier subcontractors).

(C) Providing interested DBEs with adequate information about the plans, specifications, and requirements of the contract in a timely manner to assist them in responding to a solicitation.

(D) (1) Negotiating in good faith with interested DBEs. It is the bidder's responsibility to make a portion of the work available to DBE subcontractors and suppliers and to select those portions of the work or material needs consistent with the available DBE subcontractors and suppliers, so as to facilitate DBE participation. Evidence of such negotiation includes the names, addresses, and telephone numbers of DBEs

that were considered; a description of the information provided regarding the plans and specifications for the work selected for subcontracting; and evidence as to why additional agreements could not be reached for DBEs to perform the work.

(2) A bidder using good business judgment would consider a number of factors in negotiating with subcontractors, including DBE subcontractors, and would take a firm's price and capabilities as well as contract goals into consideration. However, the fact that there may be some additional costs involved in finding and using DBEs is not in itself sufficient reason for a bidder's failure to meet the contract DBE goal, as long as such costs are reasonable. Also, the ability or desire of a prime contractor to perform the work of a contract with its own organization does not relieve the bidder of the responsibility to make good faith efforts. Bidding contractors are not, however, required to accept higher quotes from DBEs if the price difference is excessive or unreasonable.

(E) Not rejecting DBEs as being unqualified without sound reasons based on a thorough investigation of their capabilities. The bidder's standing within its industry, membership in specific groups, organizations, or associates and political or social affiliations (for example, union vs. non-union employee status) are not legitimate causes for the rejection or non-solicitation of bids in the bidder's efforts to meet the project goal.

(F) Making efforts to assist interested DBEs in obtaining bonding, lines of credit, or insurance as required by the recipient or bidder.

(G) Making efforts to assist interested DBEs in obtaining necessary equipment, supplies, materials, or related assistance or services.

(H) Effectively using the services of available minority/women community organizations; minority/women contractors' groups; Federal, State, and local minority/women business assistance offices; and other organizations as allowed on a case-by-case basis to provide assistance in the recruitment and placement of DBEs. Contact within 7 days from the bid opening the Business Opportunity and Work Force Development Unit at BOWD@ncdot.gov to give notification of the bidder's inability to get DBE quotes.

(I) Any other evidence that the bidder submits which shows that the bidder has made reasonable good faith efforts to meet the DBE goal.

In addition, the Department may take into account the following:

(1) Whether the bidder's documentation reflects a clear and realistic plan for achieving the DBE goal.

(2) The bidders' past performance in meeting the DBE goals.

(3) The performance of other bidders in meeting the DBE goal. For example, when the apparent successful bidder fails to meet the DBE goal, but others meet it, you may reasonably raise the question of whether, with additional reasonable efforts the apparent successful bidder could have met the goal. If the apparent successful

bidder fails to meet the DBE goal, but meets or exceeds the average DBE participation obtained by other bidders, the Department may view this, in conjunction with other factors, as evidence of the apparent successful bidder having made a good faith effort.

If the Department does not award the contract to the apparent lowest responsive bidder, the Department reserves the right to award the contract to the next lowest responsive bidder that can satisfy to the Department that the DBE goal can be met or that an adequate good faith effort has been made to meet the DBE goal.

Non-Good Faith Appeal

The Engineer will notify the Contractor verbally and in writing of non-good faith. A Contractor may appeal a determination of non-good faith made by the Goal Compliance Committee. If a Contractor wishes to appeal the determination made by the Committee, they shall provide written notification to the Engineer. The appeal shall be made within 2 business days of notification of the determination of non-good faith.

Counting DBE Participation Toward Meeting DBE Goal

(A) Participation

The total dollar value of the participation by a committed DBE will be counted toward the contract goal requirement. The total dollar value of participation by a committed DBE will be based upon the value of work performed by the DBE and the actual payments to DBE firms by the Contractor.

(B) Joint Checks

Prior notification of joint check use shall be required when counting DBE participation for services or purchases that involves the use of a joint check. Notification shall be through submission of Form JC-1 *(Joint Check Notification Form)* and the use of joint checks shall be in accordance with the Department's Joint Check Procedures.

(C) Subcontracts (Non-Trucking)

A DBE may enter into subcontracts. Work that a DBE subcontracts to another DBE firm may be counted toward the contract goal requirement. Work that a DBE subcontracts to a non-DBE firm does not count toward the contract goal requirement. If a DBE contractor or subcontractor subcontracts a significantly greater portion of the work of the contract than would be expected on the basis of standard industry practices, it shall be presumed that the DBE is not performing a commercially useful function. The DBE may present evidence to rebut this presumption to the Department. The Department's decision on the rebuttal of this presumption is subject to review by the Federal Highway Administration but is not administratively appealable to USDOT.

(D) Joint Venture

When a DBE performs as a participant in a joint venture, the Contractor may count toward its contract goal requirement a portion of the total value of participation with the DBE in the joint venture, that portion of the total dollar value being a distinct clearly defined portion of work that the DBE performs with its forces.

(E) Manufacturer, Regular Dealer, Distributor

A Contractor may count toward its DBE requirement 40 percent of its expenditures for materials or supplies (including transportation costs) from a DBE distributor, 60 percent of its expenditures for materials or supplies (including transportation costs) from a DBE regular dealer and 100 percent of such expenditures obtained from a DBE manufacturer.

A Contractor may count toward its DBE requirement the following expenditures to DBE firms that are not manufacturers, regular dealers or distributors:

(1) The fees or commissions charged by a DBE firm for providing a *bona fide* service, such as professional, technical, consultant, or managerial services, or for providing bonds or insurance specifically required for the performance of a DOT-assisted contract, provided the fees or commissions are determined to be reasonable and not excessive as compared with fees and commissions customarily allowed for similar services.

(2) With respect to materials or supplies purchased from a DBE, which is neither a manufacturer, regular dealer, nor a distributor count the entire amount of fees or commissions charged that the Department deems to be reasonable, including transportation charges for the delivery of materials or supplies. Do not count any portion of the cost of the materials and supplies themselves.

A Contractor will submit a completed *DBE Regular Dealer/Distributor Affirmation Form* with the Letter of Intent to the Engineer. The Engineer will forward to the State Contractor Utilization Engineer or DBE@ncdot.gov. The State Contractor Utilization Engineer will make a preliminary assessment as to whether a DBE supplier has the demonstrated capacity to perform a commercially useful function (CUF) on a contract-by-contract basis *prior* to its participation.

Commercially Useful Function

(A) DBE Utilization

The Contractor may count toward its contract goal requirement only expenditures to DBEs that perform a commercially useful function in the work of a contract. A DBE performs a commercially useful function when it is responsible for execution of the work of the contract and is carrying out its responsibilities by performing, managing, and supervising the work involved. To perform a commercially useful function, the DBE shall also be responsible with respect to materials and supplies used on the contract, for negotiating price, determining quality and quantity, ordering the material and installing (where

applicable) and paying for the material itself. To determine whether a DBE is performing a commercially useful function, the Department will evaluate the amount of work subcontracted, industry practices, whether the amount the firm is to be paid under the contract is commensurate with the work it is performing and the DBE credit claimed for its performance of the work, and any other relevant factors.

(B) DBE Utilization in Trucking

The following factors will be used to determine if a DBE trucking firm is performing a commercially useful function:

(1) The DBE shall be responsible for the management and supervision of the entire trucking operation for which it is responsible on a particular contract, and there shall not be a contrived arrangement for the purpose of meeting DBE goals.

(2) The DBE shall itself own and operate at least one fully licensed, insured, and operational truck used on the contract.

(3) The DBE receives credit for the total value of the transportation services it provides on the contract using trucks it owns, insures, and operates using drivers it employs.

(4) The DBE may subcontract the work to another DBE firm, including an owner-operator who is certified as a DBE. The DBE who subcontracts work to another DBE receives credit for the total value of the transportation services the subcontracted DBE provides on the contract.

(5) The DBE may also subcontract the work to a non-DBE firm, including from an owner-operator. The DBE who subcontracts the work to a non-DBE is entitled to credit for the total value of transportation services provided by the non-DBE subcontractor not to exceed the value of transportation services provided by DBE-owned trucks on the contract. Additional participation by non-DBE subcontractors receives credit only for the fee or commission it receives as a result of the subcontract arrangement. The value of services performed under subcontract agreements between the DBE and the Contractor will not count towards the DBE contract requirement.

(6) A DBE may lease truck(s) from an established equipment leasing business open to the general public. The lease must indicate that the DBE has exclusive use of and control over the truck. This requirement does not preclude the leased truck from working for others during the term of the lease with the consent of the DBE, so long as the lease gives the DBE absolute priority for use of the leased truck. This type of lease may count toward the DBE's credit as long as the driver is under the DBE's payroll.

(7) Subcontracted/leased trucks shall display clearly on the dashboard the name of the DBE that they are subcontracted/leased to and their own company name if it is not identified on the truck itself. Magnetic door signs are not permitted.

DBE Replacement

When a Contractor has relied on a commitment to a DBE subcontractor (or an approved substitute DBE subcontractor) to meet all or part of a contract goal requirement, the contractor shall not terminate the DBE subcontractor or any portion of its work for convenience. This includes, but is not limited to, instances in which the Contractor seeks to perform the work of the terminated subcontractor with another DBE subcontractor, a non-DBE subcontractor, or with the Contractor's own forces or those of an affiliate.

The Contractor must give notice in writing both by certified mail and email to the DBE subcontractor, with a copy to the Engineer of its intent to request to terminate a DBE subcontractor or any portion of its work, and the reason for the request. The Contractor must give the DBE subcontractor five (5) business days to respond to the Contractor's Notice of Intent to Request Termination and/or Substitution. If the DBE subcontractor objects to the intended termination/substitution, the DBE, within five (5) business days must advise the Contractor and the Department of the reasons why the action should not be approved. The five-day notice period shall begin on the next business day after written notice is provided to the DBE subcontractor.

A committed DBE subcontractor may only be terminated or any portion of its work after receiving the Department's written approval based upon a finding of good cause for the proposed termination and/or substitution. Good cause does not exist if the Contractor seeks to terminate a DBE or any portion of its work that it relied upon to obtain the contract so that the Contractor can self-perform the work for which the DBE was engaged, or so that the Contractor can substitute another DBE or non-DBE contractor after contract award. For purposes of this section, good cause shall include the following circumstances:

(a) The listed DBE subcontractor fails or refuses to execute a written contract;
(b) The listed DBE subcontractor fails or refuses to perform the work of its subcontract in a way consistent with normal industry standards. Provided, however, that good cause does not exist if the failure or refusal of the DBE subcontractor to perform its work on the subcontract results from the bad faith or discriminatory action of the prime contractor;
(c) The listed DBE subcontractor fails or refuses to meet the prime contractor's reasonable, nondiscriminatory bond requirements;
(d) The listed DBE subcontractor becomes bankrupt, insolvent, or exhibits credit unworthiness;
(e) The listed DBE subcontractor is ineligible to work on public works projects because of suspension and debarment proceedings pursuant to 2 CFR parts 180, 215 and 1200 or applicable State law;
(f) The listed DBE subcontractor is not a responsible contractor;
(g) The listed DBE voluntarily withdraws from the project and provides written notice of withdrawal;
(h) The listed DBE is ineligible to receive DBE credit for the type of work required;
(i) A DBE owner dies or becomes disabled with the result that the listed DBE contractor is unable to complete its work on the contract; and
(j) Other documented good cause that compels the termination of the DBE subcontractor.

The Contractor shall comply with the following for replacement of a committed DBE:

(A) Performance Related Replacement

When a committed DBE is terminated for good cause as stated above, an additional DBE that was submitted at the time of bid may be used to fulfill the DBE commitment. A good faith effort will only be required for removing a committed DBE if there were no additional DBEs submitted at the time of bid to cover the same amount of work as the DBE that was terminated.

If a replacement DBE is not found that can perform at least the same amount of work as the terminated DBE, the Contractor shall submit a good faith effort documenting the steps taken. Such documentation shall include, but not be limited to, the following:

(1) Copies of written notification to DBEs that their interest is solicited in contracting the work defaulted by the previous DBE or in subcontracting other items of work in the contract.

(2) Efforts to negotiate with DBEs for specific subbids including, at a minimum:

(a) The names, addresses, and telephone numbers of DBEs who were contacted.
(b) A description of the information provided to DBEs regarding the plans and specifications for portions of the work to be performed.

(3) A list of reasons why DBE quotes were not accepted.

(4) Efforts made to assist the DBEs contacted, if needed, in obtaining bonding or insurance required by the Contractor.

(B) Decertification Replacement

(1) When a committed DBE is decertified by the Department after the SAF (*Subcontract Approval Form*) has been received by the Department, the Department will not require the Contractor to solicit replacement DBE participation equal to the remaining work to be performed by the decertified firm. The participation equal to the remaining work performed by the decertified firm will count toward the contract goal requirement but not the overall goal.

(i) If the DBE's ineligibility is caused solely by its having exceeded the size standard during the performance of the contract. The Department may continue to count participation equal to the remaining work performed by the decertified firm which will count toward the contract goal requirement and overall goal.

(ii) If the DBE’s ineligibility is caused solely by its acquisition by or merger with a non-DBE during the performance of the contract. The Department may not continue to count the portion of the decertified firm’s performance

on the contract remaining toward either the contract goal or the overall goal, even if the Contractor has executed a subcontract with the firm or the Department has executed a prime contract with the DBE that was later decertified.

(2) When a committed DBE is decertified prior to the Department receiving the SAF (*Subcontract Approval Form*) for the named DBE firm, the Contractor shall take all necessary and reasonable steps to replace the DBE subcontractor with another DBE subcontractor to perform at least the same amount of work to meet the DBE goal requirement. If a DBE firm is not found to do the same amount of work, a good faith effort must be submitted to NCDOT (see A herein for required documentation).

All requests for replacement of a committed DBE firm shall be submitted to the Engineer for approval on Form RF-1 *(DBE Replacement Request).* If the Contractor fails to follow this procedure, the Contractor may be disqualified from further bidding for a period of up to 6 months

Changes in the Work

When the Engineer makes changes that result in the reduction or elimination of work to be performed by a committed DBE, the Contractor will not be required to seek additional participation. When the Engineer makes changes that result in additional work to be performed by a DBE based upon the Contractor's commitment, the DBE shall participate in additional work to the same extent as the DBE participated in the original contract work.

When the Engineer makes changes that result in extra work, which has more than a minimal impact on the contract amount, the Contractor shall seek additional participation by DBEs unless otherwise approved by the Engineer.

When the Engineer makes changes that result in an alteration of plans or details of construction, and a portion or all of the work had been expected to be performed by a committed DBE, the Contractor shall seek participation by DBEs unless otherwise approved by the Engineer.

When the Contractor requests changes in the work that result in the reduction or elimination of work that the Contractor committed to be performed by a DBE, the Contractor shall seek additional participation by DBEs equal to the reduced DBE participation caused by the changes.

Reports and Documentation

A SAF (*Subcontract Approval Form*) shall be submitted for all work which is to be performed by a DBE subcontractor. The Department reserves the right to require copies of actual subcontract agreements involving DBE subcontractors.

When using transportation services to meet the contract commitment, the Contractor shall submit a proposed trucking plan in addition to the SAF. The plan shall be submitted prior to beginning construction on the project. The plan shall include the names of all trucking firms proposed for use, their certification type(s), the number of trucks owned by the firm, as well as the individual truck identification numbers, and the line item(s) being performed.

Within 30 calendar days of entering into an agreement with a DBE for materials, supplies or services, not otherwise documented by the SAF as specified above, the Contractor shall furnish the Engineer a copy of the agreement. The documentation shall also indicate the percentage (60% or 100%) of expenditures claimed for DBE credit.

Reporting Disadvantaged Business Enterprise Participation

The Contractor shall provide the Engineer with an accounting of payments made to all DBE firms, including material suppliers and contractors at all levels (prime, subcontractor, or second tier subcontractor). This accounting shall be furnished to the Engineer for any given month by the end of the following month. Failure to submit this information accordingly may result in the following action:

(A) Withholding of money due in the next partial pay estimate; or

(B) Removal of an approved contractor from the prequalified bidders' list or the removal of other entities from the approved subcontractors list.

While each contractor (prime, subcontractor, 2nd tier subcontractor) is responsible for accurate accounting of payments to DBEs, it shall be the prime contractor's responsibility to report all monthly and final payment information in the correct reporting manner.

Failure on the part of the Contractor to submit the required information in the time frame specified may result in the disqualification of that contractor and any affiliate companies from further bidding until the required information is submitted.

Failure on the part of any subcontractor to submit the required information in the time frame specified may result in the disqualification of that contractor and any affiliate companies from being approved for work on future projects until the required information is submitted.

Contractors reporting transportation services provided by non-DBE lessees shall evaluate the value of services provided during the month of the reporting period only.

At any time, the Engineer can request written verification of subcontractor payments.

The Contractor shall report the accounting of payments through the Department's DBE Payment Tracking System.

Failure to Meet Contract Requirements

Failure to meet contract requirements in accordance with Subarticle 102-15(J) of the *Standard Specifications* may be cause to disqualify the Contractor.

CERTIFICATION FOR FEDERAL-AID CONTRACTS:

(3-21-90) SP1 G85

The prospective participant certifies, by signing and submitting this bid or proposal, to the best of his or her knowledge and belief, that:

(A) No Federal appropriated funds have been paid or will be paid, by or on behalf of the undersigned, to any person for influencing or attempting to influence an officer or employee of any Federal agency, a Member of Congress, an officer or employee of Congress, or an employee of a Member of Congress in connection with the awarding of any Federal contract, the making of any Federal grant, the making of any Federal loan, the entering into of any cooperative agreement, and the extension, continuation, renewal, amendment, or modification of any Federal contract, grant, loan, or cooperative agreement.

(B) If any funds other than Federal appropriated funds have been paid or will be paid to any person for influencing or attempting to influence an officer or employee of any Federal agency, a Member of Congress, an officer or employee of Congress, or an employee of a Member of Congress in connection with this Federal contract, grant, loan, or cooperative agreement, the undersigned shall complete and submit Standard Form-LLL, *Disclosure Form to Report Lobbying*, in accordance with its instructions.

This certification is a material representation of fact upon which reliance was placed when this transaction was made or entered into. Submission of this certification is a prerequisite for making or entering into this transaction imposed by *Section 1352, Title 31, U.S. Code*. Any person who fails to file the required certification shall be subject to a civil penalty of not less than $10,000 and not more than $100,000 for each such failure.

The prospective participant also agrees by submitting his or her bid or proposal that he or she shall require that the language of this certification be included in all lower tier subcontracts, which exceed $100,000 and that all such subrecipients shall certify and disclose accordingly.

RESTRICTIONS ON ITS EQUIPMENT AND SERVICES:

(11-17-20) SP01 G090

All telecommunications, video or other ITS equipment or services installed or utilized on this project must be in conformance with UNIFORM ADMINISTRATIVE REQUIREMENTS, COST PRINCIPLES, AND AUDIT REQUIREMENTS FOR FEDERAL AWARDS **2 CFR, § 200.216 Prohibition on certain telecommunications and video surveillance services or equipment.**

USE OF UNMANNED AIRCRAFT SYSTEM (UAS):

(8-20-19)(Rev. 12-15-26) SP1 G092

The Contractor shall adhere to all Federal, State and Local regulations and guidelines for the use of Unmanned Aircraft Systems (UAS). This includes but is not limited to US 14 CFR Part 107, NC GS 15A-300, American Security Drone Act of 2023 (ASDA), Office of Management and Budget (OMB) Memorandum M-26-02, FHWA UAS Policy No. FHWA-HIF-26-011, all FAA rules, regulations and policies and all NCDOT UAS Policies. The required operator certifications include possessing a current Federal Aviation Administration (FAA) Remote Pilot Certificate, as well as operating a UAS registered with the FAA.

All UAS operations shall be approved by the Engineer prior to beginning the operations. The Contractor shall provide, upon request, documentation of the manufacturer and supply chain provenance for all UAS used on the project.

All contractors or subcontractors operating UAS shall have UAS specific general liability insurance to cover all operations under this contract.

The use of UAS is at the Contractor's discretion. No measurement or payment will be made for the use of UAS. In the event that the Department directs the Contractor to utilize UAS, payment will be in accordance with Article 104-7 Extra Work.

EQUIPMENT IDLING GUIDELINES:

(1-19-21) 107 SP1 G096

Exercise reduced fuel consumption and reduced equipment emissions during the construction of all work associated with this contract. Employees engaged in the construction of this project should turn off vehicles when stopped for more than thirty (30) minutes and off-highway equipment should idle no longer than fifteen (15) consecutive minutes.

These guidelines for turning off vehicles and equipment when idling do not apply to:

1. Idling when queuing.
2. Idling to verify the vehicle is in safe operating condition.
3. Idling for testing, servicing, repairing or diagnostic purposes.
4. Idling necessary to accomplish work for which the vehicle was designed (such as operating a crane, mixing concrete, etc.).
5. Idling required to bring the machine system to operating temperature.
6. Emergency vehicles, utility company, construction, and maintenance vehicles where the engines must run to perform needed work.
7. Idling to ensure safe operation of the vehicle.
8. Idling when the propulsion engine is providing auxiliary power for other than heating or air conditioning. (such as hydraulic systems for pavers)
9. When specific traffic, safety, or emergency situations arise.
10. If the ambient temperature is less than 32 degrees Fahrenheit. Limited idling to provide for the safety of vehicle occupants (e.g. to run the heater).
11. If the ambient temperature is greater than 90 degrees Fahrenheit. Limited idling to provide for the safety of vehicle occupants of off-highway equipment (e.g. to run the air conditioning) no more than 30 minutes.
12. Diesel powered vehicles may idle for up to 30 minutes to minimize restart problems.

Any vehicle, truck, or equipment in which the primary source of fuel is natural gas or electricity is exempt from the idling limitations set forth in this special provision.

U.S. DEPARTMENT OF TRANSPORTATION HOTLINE:

(11-22-94) 108-5 SP1 G100

To report bid rigging activities call: **1-800-424-9071**

The U.S. Department of Transportation (DOT) operates the above toll-free hotline Monday through Friday, 8:00 a.m. to 5:00 p.m. eastern time. Anyone with knowledge of possible bid rigging, bidder collusion, or other fraudulent activities should use the hotline to report such activities.

The hotline is part of the DOT's continuing effort to identify and investigate highway construction contract fraud and abuse is operated under the direction of the DOT Inspector General. All information will be treated confidentially and caller anonymity will be respected.

ELECTRONIC BIDDING:

(8-18-26) 101, 102, 103 SP1 G140

Revise the *Standard Specifications* as follows:

Page 1-4, Article 101-3, DEFINITIONS, BID (OR PROPOSAL) ***Electronic Bid,*** **line 3,** replace "electronic bidding software" with "electronic bidding website".

Page 1-16, Subarticle 102-8(B), Electronic Bids, lines 13-14, replace "electronic bidding software" with "electronic bidding website".

Page 1-18, Article 102-10, BID BOND OR BID DEPOSIT, line 43, replace "electronic bidding software" with "electronic bidding website".

Page 1-18, Article 102-11, DELIVERY OF BIDS, line 47, replace "electronic bidding software" with "electronic bidding website".

Page 1-25, Subarticle 103-4(B)(2), Electronic Bids, line 20, replace the first paragraph with the following:

This form is located on the electronic submittal website. The bidder shall click on yes or no to indicate whether or not the bidder desires to limit the award, provide the award limit if desiring to limit the award, and provide the project number and county of the projects associated with the award limit.

PROJECT SPECIAL PROVISIONS

ROADWAY

NOTE TO CONTRACTOR:

Portable Changeable CMS (Short Term) are included to give drivers advance notice of the new traffic patterns, traffic pattern changes, etc.

A CMS shall be placed in each direction on US 70 Business (Market Street) (one west of 2nd Street and one east of 3rd Street) for 7 days prior to the new traffic patterns on 2nd Street and 3rd Street being placed into operation. These message signs should remain in place for 14 days after the traffic pattern changes are implemented.

A CMS shall be placed in each direction on 2nd Street (one south of Johnston Street and one north of Bridge Street) for 7 days prior to the new traffic patterns on 2nd Street and Johnston Street being placed into operation. These message signs should remain in place for 14 days after the traffic pattern changes are implemented.

A CMS shall be placed in each direction on 3rd Street (one south of Johnston Street and one north of Bridge Street) for 7 days prior to the new traffic patterns on 3rd Street and Johnston Street being placed into operation. These message signs should remain in place for 14 days after the traffic pattern changes are implemented.

A CMS shall be placed in each direction on Johnston Street (one west of 2nd Street and one east of 3rd Street) for 7 days prior to the new traffic patterns on Johnston Street, 2nd Street and 3rd Street being placed into operation. These message signs should remain in place for 14 days after the traffic pattern changes are implemented.

A CMS shall be placed in each direction on Bridge Street (one west of 2nd Street and one east of 3rd Street) for 7 days prior to the new traffic patterns on 2nd Street and 3rd Street being placed into operation. These message signs should remain in place for 14 days after the traffic pattern changes are implemented.

The message on each CMS prior to the traffic pattern changes being placed into operation should indicate “New Traffic Pattern– Starting XX/XX” or a similar message as directed by the Engineer. The message on each CMS after the signal is placed into operation should indicate “New Traffic Pattern Ahead” or a similar message as directed by the Engineer.

Payment for *Portable Changeable CMS (Short Term)* will be separate from *Temporary Traffic Control* included elsewhere in this proposal.

CLEARING AND GRUBBING - METHOD II:

(9-17-02)(Rev. 3-19-24) 200 SP2 R02A

Perform clearing on this project to the limits established by Method - II shown on Standard Drawing No. 200.02 of the *Roadway Standard Drawings*. Conventional clearing methods may be used except where permit drawings or conditions have been included in the proposal which require certain areas to be cleared by hand methods.

BURNING RESTRICTIONS:
(7-1-95) 200, 210, 215 SP2 R05

Open burning is not permitted on any portion of the right-of-way limits established for this project. Do not burn the clearing, grubbing or demolition debris designated for disposal and generated from the project at locations within the project limits, off the project limits or at any waste or borrow sites in this county. Dispose of the clearing, grubbing and demolition debris by means other than burning, according to state or local rules and regulations.

ASPHALT CONCRETE PLANT MIX PAVEMENTS MILL AND FILL:
(6-16-26) 610 SP6 R04R

Revise the *Standard Specifications* as follows:

Page 6-21 and 6-22, Article 610-8, **SPREADING AND FINISHING, lines 46-47 and lines 1-2**, replace the eighth paragraph with the following:

Operate the paver as continuously as possible. Sequence paving operations to promote uniformity, minimize longitudinal joints, and maintain ride quality. Pave the mainline roadway prior to paving intersections, auxiliary lanes, ramps, turn lanes, and other irregular areas, unless otherwise approved by the Engineer.

For mill and fill resurfacing operations where the existing pavement surface is milled and replaced in kind, the Contractor may sequence paving operations in any order, including paving intersecting roads, ramps, auxiliary lanes, and adjacent areas in advance of the mainline, provided the sequence does not adversely affect longitudinal joint construction, density, or surface smoothness, and all requirements of the contract are met.

Place wedging or leveling courses where required by the contract or as directed by the Engineer.

PRICE ADJUSTMENT - ASPHALT BINDER FOR PLANT MIX:
(11-21-00)(Rev. 1-16-24) 620 SP6 R25

Price adjustments for asphalt binder for plant mix will be made in accordance with Section 620 of the *Standard Specifications.*

The base price index for asphalt binder for plant mix is **$752.50** per ton.

This base price index represents an average of F.O.B. selling prices of asphalt binder at supplier's terminals on **November 1, 2026**.

DELETION OF FINAL SURFACE TESTING REQUIREMENTS:
(1-20-25) 610 SP6 R045A

Revise the *Standard Specifications* as follows:

Pages 6-24 to 6-30, Article 610-13 FINAL SURFACE TESTING AND ACCEPTANCE, delete Article 610-13 in its entirety.

DETECTABLE WARNING SURFACE AT CURB RAMPS:

(8-19-25) 848 SP8 R52A

Description

Install detectable warning surface at curb ramps as shown in the plans or as directed by the Engineer, in accordance with Section 848 of the *Standard Specifications* and this special provision.

Materials

Detectable warning surface materials shall consist of raised truncated domes found on the NCDOT APL, meet the requirements of Article 848-2 of the *Standard Specifications* and be capable of being affixed to or anchored in the concrete sidewalk, including green concrete defined as concrete that has set but not appreciably hardened, cured concrete, or asphalt pavement. Surface applied such as glued or stick down applications are prohibited for permanent installations unless approved by the Engineer.

The detectable warning surface shall be uniform in color and texture, be free of cracks or other defects. The color shall be an approximate visual match to the color specified in the contract or as approved by the Engineer.

Construction Methods

Install all detectable warning surface in accordance with the manufacturer's recommendations, Article 848-3 of the *Standard Specifications* and as approved by the Engineer. Ensure the surface is free of debris and irregularities prior to placing the detectable warning on the surface. Place in fresh concrete, before the concrete has reached initial set, or on a hardened cement concrete surface or asphalt pavement surface. Secure permanent installations with mechanical fasteners. No cutting of the coated colored truncated domes is allowed. Embossing or stamping the wet concrete to achieve the truncated dome pattern or using a mold into which a catalyst-hardened material is applied is not allowed. Detectable warning surfaces shall be 24 inches in the direction of travel and extend the full width of the flush surface. The detectable warning surface shall show no appreciable fading, lifting or shrinkage and fit contours, breaks and faults of concrete and asphalt surfaces and show no significant tearing, rollback, lifting or other signs of poor adhesion.

Remove and replace any damaged or misaligned detectable warning surfaces and repair any damage to adjacent facilities prior to final acceptance at no cost to the Department. The finished installation shall meet all applicable ADA and Public Right-of-Way Accessibility Guidelines (PROWAG) requirements for placement, orientation, surface condition, and visual contrast.

Measurement and Payment

The detectable warning surface at curb ramps are incidental to *Concrete Curb Ramps*, *Retrofit Existing Curb Ramps*, and/or *Remove and Replace Curb Ramps* in accordance with Article 848-4 of the *Standard Specifications*.

ELECTRONIC TICKETING SYSTEM:

(7-16-24)(Rev. 12-17-24) 1020 SP10 R20

Description

At the contractor's option, the use of an electronic ticketing system for reporting individual and cumulative asphalt material deliveries may be utilized on this project. At the preconstruction conference, the contractor shall notify the Engineer if they intend to utilize an electronic ticketing system for reporting individual and cumulative asphalt material deliveries to the project.

Electronic Ticketing Requirements

a. The electronic ticketing system must be fully integrated with the load read-out system at the plant. The system shall be designed so data inputs from scales cannot be altered by either the Contractor or the Department.

b. Material supplier must test to confirm that ticketing data can be shared from the originating system no less than 30 days prior to project start.

c. After each truck is loaded, ticket data must be electronically captured, and ticket information uploaded via Application Programming Interface (API) to the Department.

d. Obtain security token from NCDOT for access to E-Ticketing portal (to send tickets). To request a Security Key, fill out the below E-Ticketing Security Request Form: https://forms.office.com/g/XnT7QeRtgt

e. Obtain API from NCDOT containing the required e-ticketing data fields and format. Download the API from the NCDOT E-ticketing Webpage: https://connect.ncdot.gov/projects/construction/E-Ticketing/Pages/default.aspx

f. Provide all ticket information in real time and daily summaries to the Department's designated web portal. If the project contains locations with limited cellular service, an alternative course of action must be agreed upon.

g. Electronic ticketing submissions must be sent between the Material Supplier and the Department.

h. The electronic ticket shall contain the following information:

Date
Contract Number
Supplier Name
Contractor Name
Material
JMF
Gross Weight
Tare Weight
Net Weight
Load Number

Cumulative Weight
Truck Number
Weighmaster Certification
Weighmaster Expiration
Weighmaster Name
Facility Name
Plant Certification Number
Ticket Number
Hauling Firm (optional)
Voided Ticket Number (if necessary)
Original Ticket Number (if necessary)
Supplier Revision (If necessary)

The Contractor/supplier can use the electronic ticketing system of their choice to meet the requirements of this provision.

Measurement and Payment

No measurement or payment will be made for utilizing an electronic ticketing system as the cost of such shall be included in the contract price bid for the material being provided.

GROUND MOUNTED SIGN SUPPORTS:
(9-15-26) 1094 SP10 R94

Revise the *Standard Specifications* as follows:

Page 10-214, Subarticle 1094-1(B) 3 lb Steel U-Channel Supports, line 12 and 15, replace "3/8" with "7/16".

Page 10-214, Subarticle 1094-1(B) 3 lb Steel U-Channel Supports, line 16, replace "5/16" with "3/8".

Page 10-214, Subarticle 1094-1(B) 3 lb Steel U-Channel Supports, lines 14-15, delete the fifth sentence of the first paragraph and replace with the following:

These supports shall be galvanized in accordance with ASTM A653 or ASTM A123 depending on the manufacturing process.

Page 10-214, Subarticle 1094-1(C) 2 lb Steel U-Channel Supports, lines 26-29, delete the third and fourth sentence of the second paragraph with the following:

Punch or drill 7/16 inch diameter holes on 1 inch centers, beginning 1 inch from the top of the post, for a minimum distance equal to the vertical dimension of the respective sign or mile marker. These supports shall be galvanized in accordance with ASTM A653 or ASTM A123 depending on the manufacturing process.

Page 10-214, Subarticle 1094-1(C) 2 lb Steel U-Channel Supports, line 30, replace "3/8" with "7/16".

Page 10-214, Subarticle 1094-1(C) 2 lb Steel U-Channel Supports, line 31, replace "5/16" with "3/8".

Page 10-214, Subarticle 1094-1(D) Steel Square Tube Supports, lines 36-43, delete and replace the first two paragraphs with the following:

Use steel square tube supports of variable length galvanized steel. The support cross section and gauge shall be in accordance with the plans. These supports shall be manufactured using domestic steel conforming to ASTM 1011, Grade 50. Minimum yield strength after cold forming shall be 60,000 psi. These supports shall be galvanized in accordance with ASTM A653 or ASTM A123 depending on the manufacturing process and meet G90 galvanizing requirements. Both the interior and exterior of the post shall be galvanized and all coating applications shall occur in the United States.

The posts shall be corner welded and scarfed as necessary to allow sections to telescope within each other. The finished posts shall be machine straightened and have a smooth uniform finish free from cracks, flaws, injurious seams, laps, blisters, and edges which are ragged, sharp, and imperfect, or other defects affecting their strength, durability, or appearance. The maximum variation in straightness shall be no more than 1/4 inch in any 5 foot of length. For perforated square tubes, cut holes or knockout holes of 7/16 inch diameter shall be spaced on 1 inch centers, on the centerlines of all four sides in true alignment, and opposite to each other for back to back applications. All holes and sheared ends shall be free from burrs. The steel shall also be coated with a conversion coating and a clear organic polymer topcoat.

The zinc coating nor manufacturing process shall interfere with the telescoping properties of steel square supports. The zinc coating inside of the 7/16 inch diameter holes of perforated supports shall not exceed specification requirements enough to prevent a 3/8 inch diameter bolt from freely passing through. These supports should contain a manufacturer's mark for traceability after installation. Provide a Type 2 material certification in accordance with Article 106-3 upon Engineer request.

WORK ZONE INSTALLER:
(7-20-21)(Rev. 4-21-26) 1101 SP11 R04

Revise the *Standard Specifications* as follows:

Page 11-4, Article 1101-14 WORK ZONE INSTALLER, lines 25-26, delete the first sentence of the first paragraph and replace with the following:

When temporary traffic control consists of more than flagging operations, the Contractor shall provide the service of at least one qualified work zone installer during the setup, installation, and removal of temporary traffic control within the highway right of way.

CONES:
(3-19-24) 1135 SP11 R35

Revise the *Standard Specifications* as follows:

Page 11-11, Article 1135-3 CONSTRUCTION METHODS, lines 19-20, delete the third sentence of the first paragraph, "Do not use cones in the upstream taper of lane or shoulder closures for multi-lane roadways.".

FLAGGERS:
(12-17-24)(Rev. 12-23-25) 1150 SP11 R50

Revise Section 1150 of the *Standard Specification* as follows:

Page 11-13, Article 1150-1, DESCRIPTION, add the following after line 31:

Alternatively, at the discretion of the Contractor, the Contractor may furnish, install, place in operation, repair, maintain, relocate, and remove remotely controlled Automated Flagging Assistance Devices (AFAD) or Temporary Portable Traffic Signal units (PTS units) to assist, supplement, or replace human flaggers for one-lane, two-way traffic maintenance during construction in accordance with this provision and the *Standard Specifications*.

For the purpose of this provision, an "approach" refers to a single lane of traffic moving in one direction toward a point of control or work zone. Flaggers, AFAD and PTS units are only used to control one lane of approaching traffic in a specific direction.

Page 11-13, Article 1150-2, MATERIALS, add the following after line 34:

Provide documentation to the Engineer that the AFAD or PTS units meets or exceeds the requirements of this special provision and is on the NCDOT APL or ITS and Signals QPL.

(A) Automated Flagging Assistance Devices (AFAD)

(1) AFAD General

Cover the automated gate arm with Department approved Type VII, VIII or IX retroreflective sheeting of vertical alternating red and white stripes at 16 inch intervals measured horizontally. When the gate arm is in the down position the minimum vertical

aspect of the arm and sheeting shall be 4 inches. The retroreflectorized sheeting shall be on both sides of the gate arm. With the AFAD parked or positioned 2 feet outside or in a location deemed acceptable for the lane being controlled, the gate arm shall reach at least to the center of the lane but shall not exceed the width of the lane being controlled.

Design the system to be fail-safe. Provide a conflict monitor, malfunction monitoring unit, or similar device that monitors for malfunctions and prevents the display of conflicting indications. This system shall be electronic and operated by remote control.

(2) AFAD Type I System: RED/YELLOW

Provide a Red/Yellow AFAD with at least one set of CIRCULAR RED and CIRCULAR YELLOW lenses in a vertical configuration that are 12 inches in diameter. The bottom of the housing (including brackets) shall be at least 7 feet (2.1 meters) above the pavement.

This system is required to have yellow 12 inch aluminum or polycarbonate vehicle signal heads with 10 inch tunnel visors, backplates, and Light Emitting Diode (LED) modules. Provide signal heads, backplates, and LED modules listed on the ITS and Signals QPL available on the Department's website.

Provide an automated gate arm on the AFAD that descends to a down position across the approaching lane of traffic when the **s**teady CIRCULAR RED lens is illuminated and then ascends to an upright position when the flashing CIRCULAR YELLOW lens is illuminated. The automated gate arm is to be designed such that if a motorist pulls underneath the gate arm while lowering, no damage to the vehicle occurs.

A STOP HERE ON RED (R10-6 or R10-6a) sign shall be installed on the right-hand side of the approach at the point at which drivers are expected to stop when the steady CIRCULAR RED lens is illuminated.

To stop traffic, the AFAD shall transition from the flashing CIRCULAR YELLOW lens by initiating a <u>minimum 5 second steadily illuminated</u> CIRCULAR YELLOW lens followed by the CIRCULAR RED lens.

Once the CIRCULAR RED lens is displayed, the system is to have <u>a minimum 2 second delay</u> between the time the steady CIRCULAR RED is displayed and the time the gate arm begins to lower. The maximum delay between CIRCULAR RED and the time the gate arm lowers is 4 seconds. To permit stopped road users to proceed, the AFAD shall display the flashing CIRCULAR YELLOW lens and the gate arm shall be placed in the upright position.

Ensure the system monitors for a lack of yellow or red signal voltage, total loss of indication in any direction, presence of multiple indications on any approach and low power conditions.

Additional sets of CIRCULAR RED and CIRCULAR YELLOW lenses located over the roadway or on the left side of the approach and operated in unison with the primary set, may be used to improve visibility of the AFAD. If the set of lenses is located over any

portion of the roadway that can be used by motor vehicles, the bottom of the housing (including brackets) shall be at least 15 feet (4.6 meters) above the pavement.

(3) AFAD Type II System: STOP/SLOW

Provide STOP/SLOW signs that are octagonal in shape, made of rigid material, and at least 36 inch x 36 inch in size. Letters shall be a minimum of 8 inches high. The STOP face shall have a red background with white letters and border.

The SLOW face shall be diamond shaped, orange, or yellow background with black letters and border. Cover both faces in a Department approved Type VII, VIII or IX retroreflective sheeting. The minimum mounting height for the sign faces shall be 7 feet above the pavement to the bottom of the sign.

The AFAD's STOP/SLOW signs shall be supplemented with active conspicuity devices by incorporating a stop beacon (red lens) and a warning beacon (yellow lens). The stop beacon shall be no more than 24 inches above the STOP face. Mount the warning beacon no more than 24 inches above or beside of the SLOW face. Except for the mounting locations, the beacons shall conform to the provisions of Chapter 4L of the MUTCD and have 12 inch signal lenses.

Strobe/flashing lights are an acceptable alternative to flashing beacons. If utilized, they shall be either white or red flashing lights located within the STOP face and white or yellow flashing lights within the SLOW face and conform to the provisions of Chapter 6D of the MUTCD. If used, the lens diameter shall be a minimum of 5 inches with a minimum height of 6 inches. Equip strobes/flashing lights for both dual and quad flash patterns.

Type B warning lights shall not be used in lieu of the beacons or the strobe lights.

The faces of the AFADs STOP/SLOW sign may include louvers. If louvers are used, design the louvers such that the aspect of the sign face to approaching traffic is a full sign face at a distance of 50 feet or greater.

A WAIT ON STOP (R1-7) sign and a GO ON SLOW (R1-8) sign shall be displayed to traffic approaching the AFAD. Position signs on the same support structure as the AFAD. Both signs shall have black legends and borders on white Type III sheeting backgrounds. Each of these signs shall be rectangular in shape and be at least 24 inch x 30 inch size with letters at least 6 inches high.

Provide an automated gate arm on the AFAD that descends to a down position across the approaching lane of traffic when the STOP face is displayed and then ascends to an upright position when the SLOW face is displayed.

The automated gate arm is to be designed such that if a motorist pulls underneath the gate arm while lowering, no damage to the vehicle occurs.

A STOP HERE ON RED (R10-6 or R10-6a) sign shall be installed on the right-hand side of the approach at the point at which drivers are expected to stop when the STOP face is displayed.

When approaching motorists are to proceed, display the SLOW face and the warning beacon or strobes are to flash on the AFAD. When approaching motorists are will be stopped, display the STOP face and the stop beacon or strobes are to flash on the AFAD.

To stop traffic, the AFAD will transition from the SLOW face to the STOP face by initiating a minimum 5 second change cycle. First, the warning beacon is to be steadily illuminated for the change cycle. If strobes are used in lieu of a warning beacon, they are to be placed in the quad flash pattern. At the end of the change cycle, the STOP face is to be displayed with the stop beacon flashing and the warning beacon or strobes are to stop flashing. Once the STOP face is displayed, the system is to have a minimum 2 second delay between the time the STOP face is displayed and the time the gate arm begins to lower. The maximum delay between the time the STOP face is displayed and the time the gate arm lowers is 4 seconds.

To permit stopped road users to proceed, the gate arm shall be placed in the upright position and the AFAD shall display the SLOW face and the warning beacon or strobes are to flash in the dual flash pattern.

Do not flash the stop beacon when the SLOW face is displayed, and do not flash the warning beacon when the STOP face is displayed.

(B) Portable Traffic Signals (PTS) Units

Provide PTS units with at least one set of CIRCULAR RED, CIRCULAR YELLOW, and CIRCULAR GREEN lenses in a vertical configuration that are 12 inch diameter aluminum or polycarbonate vehicle signal heads with 10 inch tunnel visors, backplates, and Light Emitting Diode (LED) modules. All signal heads, tunnel visors, and backplates shall be yellow in color.

The bottom of the housing (including brackets) shall be at least 7 feet above the pavement for single set units. Additional signal heads on units with more than one signal head shall be capable of extending over the travel lane.

Communication Requirements

All PTS units within the signal set up systems shall maintain communication at all times by either hardwire cable or wireless radio link communication. If the hardwire cable communication is utilized the communication cable shall be deployed in a manner that will not intrude in the direct work area of the project or obstruct vehicular and pedestrian traffic. Utilize radio communication with 900MHz frequency band and frequency hopping capability. The radio link communication system shall have a minimum range of 1 mile.

Fault Mode Requirements

Revert PTS units to a flashing red mode upon system default unless otherwise specified by the Engineer. Equip the PTS units with a remote monitoring system. Where cell communication availability exists, the remote monitoring system shall adhere to the remote monitoring system section of this provision.

Remote Monitoring System

The remote monitoring system (RMS) shall be capable of reporting signal location, battery voltage / battery history and system default. Provide a password protected website viewable from any computer with internet capability for the RMS. In the event of a system default, the RMS shall provide specific information concerning the cause of the system default (i.e. red lamp on signal number 1). Equip the RMS with a mechanism capable of immediately contacting a minimum of three previously designated individuals via text messaging and/or email upon a default.

The running program operating the PTS units shall be always available and viewable through the RMS website. Maintain a history of the RMS operating system in each signal including operating hours and events and the location of the PTS units.

Trailer / Cart

The AFAD and PTS units may be mounted on either a trailer or a moveable cart system.

Finish all exterior metal surfaces with Federal orange enamel per AMS-STD-595, color chip ID# 13538 or 12473 respectively with a minimum paint thickness of 2.5 mils (64 microns).

Design and test the AFAD or PTS units trailer / cart to withstand an 80 MPH wind load while in the operational position. Provide independent certification that the assembly meets the design wind load.

Equip the AFAD or PTS units with leveling jacks capable of stabilizing the unit in a horizontal position when located on slopes 6:1 or flatter.

Equip trailers in compliance with North Carolina Law governing motor vehicles and include a 12-volt trailer lighting system complying *with Federal Motor Carrier Safety Regulations 393*, safety chains and a minimum 2 inch ball hitch.

Provide a minimum 4 inch wide strip of fluorescent conspicuity sheeting retroreflective sheeting to the frame of the trailer. Apply the sheeting to all sides of the trailer. The sheeting shall meet the ASTM requirements of Type VII, VIII or IX.

Power System

Design the systems to operate both with and without an external power source. Furnish transmitters, generators, batteries, controls and all other components necessary to operate the device.

Provide equipment that is solar powered and supplemented with a battery backup system that includes a minimum 110/120 VAC powered on-board charging system capable of powering the unit for 7 continuous days with no solar power. Each unit shall also be capable of being powered by standard 110/120 VAC power sources, if applicable.

Locate batteries and electronic controls in a locked, weather and vandal resistant housings.

Page 11-14, Article 1150-3, CONSTRUCTION METHODS, add the following after line 11:

Flaggers shall have a path to escape an errant approaching vehicle at all times, unimpeded by barrier, guardrail, guiderail, parked vehicles, construction materials, slopes steeper than 2:1, or any other obstruction at all times. If an unimpeded path cannot be maintained, the Contractor shall use AFAD or PTS units in lieu of a flagger.
Provide documentation to the Engineer prior to deploying the device that the AFAD or PTS units operator(s) are qualified flagger(s) that have been properly trained through an NCDOT approved training agency or other NCDOT approved training provider and that the qualified flagger(s) have received manufacturer training to operate that specific device. This training shall include proper installation, remote control operation, central control systems and maintenance of the AFAD or PTS units. The training shall take place off the project site where training conditions are removed from live traffic. The documentation shall include the names of the authorized trainer, the trainees, the device on which they have been trained and the date of the training. Provide updated documentation to the Engineer prior to deploying any additional operators.

Install advance warning signs and operate AFADs in accordance with the attached detail drawings in this provision.

Install advance warning signs and operate PTS units in accordance with *NCDOT Roadway Standard Drawings* No. 1101.02, Sheet 17.

AFAD and PTS units shall only be used in situations where there is only one lane of approaching traffic in the direction to be controlled. **At no time shall an AFAD unit controlling traffic through the work area be placed in an autonomous mode and/or left unattended.**

Signal timing and operation of PTS units shall be field verified and accepted by the Engineer before use.

Do not use AFAD or PTS units in locations where queueing from the AFAD or PTS units will extend to within 150 feet of a signalized intersection or railroad crossing. Do not use AFAD and PTS units as a substitute for or a replacement for a continuously operating temporary traffic control signal as described in Section 6F.84 of the MUTCD.

If used at night, illuminate each AFAD or PTS units as described in Section 6D of the MUTCD.

Provide a complete AFAD or PTS units that is capable of being relocated as traffic conditions demand.

If AFADs or PTS units become inoperative, be prepared at all times to replace the unit with the same type and model of AFAD or PTS units, revert to human flagging operations or terminate all

construction activities requiring the use of the AFAD or PTS units until the AFAD or PTS units become operative or qualified human flaggers are available.

When the work requiring the AFAD or PTS units is not pursued for 30 minutes or longer, power off each AFAD or PTS units. Removed the AFAD or PTS units from the travel lane and relocated to a minimum of 5 feet from the edge line. AFAD gate arms shall be in the upright position. Remove all traffic control devices from the road, place two cones by each AFAD or PTS units and all signs associated with the lane closure operation shall be removed or laid down. At the end of each workday, remove all AFADs or PTS units from the roadway and shoulder areas.

Ensure the system's wireless communication links continuously monitor and verify proper transmission and reception of data used to monitor and control each AFAD or PTS units. Ensure ambient mobile or other radio transmissions or adverse weather conditions do not affect the system.

In the event of a loss of communications, immediately display the flashing RED or STOP indication on all AFAD or PTS units.

AFAD Specific Construction Methods

The flagger/operator controlling the AFAD units shall be on the project site at all times. If multiple AFAD units are used, one AFAD unit shall be the Main AFAD unit and all other units shall be remote AFAD units. Ensure that each device meets the physical display and operational characteristics as specified in the MUTCD.

Multiple AFAD units may be controlled with **one** flagger/operator when the AFAD units meet each of the following requirements:

(1) AFAD units are spaced no greater than the manufacturer's recommendations.

(2) Both AFAD units can be seen at the same time from the flagger/operator's position, or the AFAD is operating on its own secure network with malfunction detection and notification to the flagger/operator.

(3) The flagger/operator has an unobstructed view of approaching traffic in both directions from the flagger/operator position or the AFAD is operating on its own secure network, with cameras that provide the flagger/operator an unobstructed view of approaching traffic from both directions. The flagger/operator may control the AFAD units from a pilot vehicle.

If any of the above requirements are not met, flagger/operator control each AFAD unit.

AFAD operators may either control traffic at side streets or driveways between the AFAD units or operate the pilot car while operating the AFAD system if approved by the Engineer. AFAD units must continue to be within clear sight of the operator during these work activities.

Page 11-14, Article 1150-4, MEASUREMENT AND PAYMENT, add the following after line 24:

Each AFAD or PTS unit will be measured and paid for as *Flaggers* paid by day in accordance with Article 1150-4 of the *Standard Specifications*. Where the pay item for *Flaggers* is not included in the original contract then no separate payment will be made for this item and payment will be included in the lump sum price bid for *Temporary Traffic Control* found elsewhere in this contract. Each approach controlled by AFAD or PTS units will be measured and paid as one flagger, irrespective of the number of devices used. If multiple PTS units are required to control a single approach, these units will collectively be considered as replacing one flagger.

No separate measurement or payment will be made for AFAD or PTS unit operators, as the cost of such including their training and operational costs shall be included in the unit or lump sum price for *Flaggers* or *Temporary Traffic Control*. Such price and payment also includes the relocation, maintenance, and removal during repair periods of AFAD or PTS units as well as the signal controller, communication, vehicle detection system, traffic signal software of PTS units and any other incidentals necessary to complete the work.

Red/Yellow Lens AFAD (TYPE I)

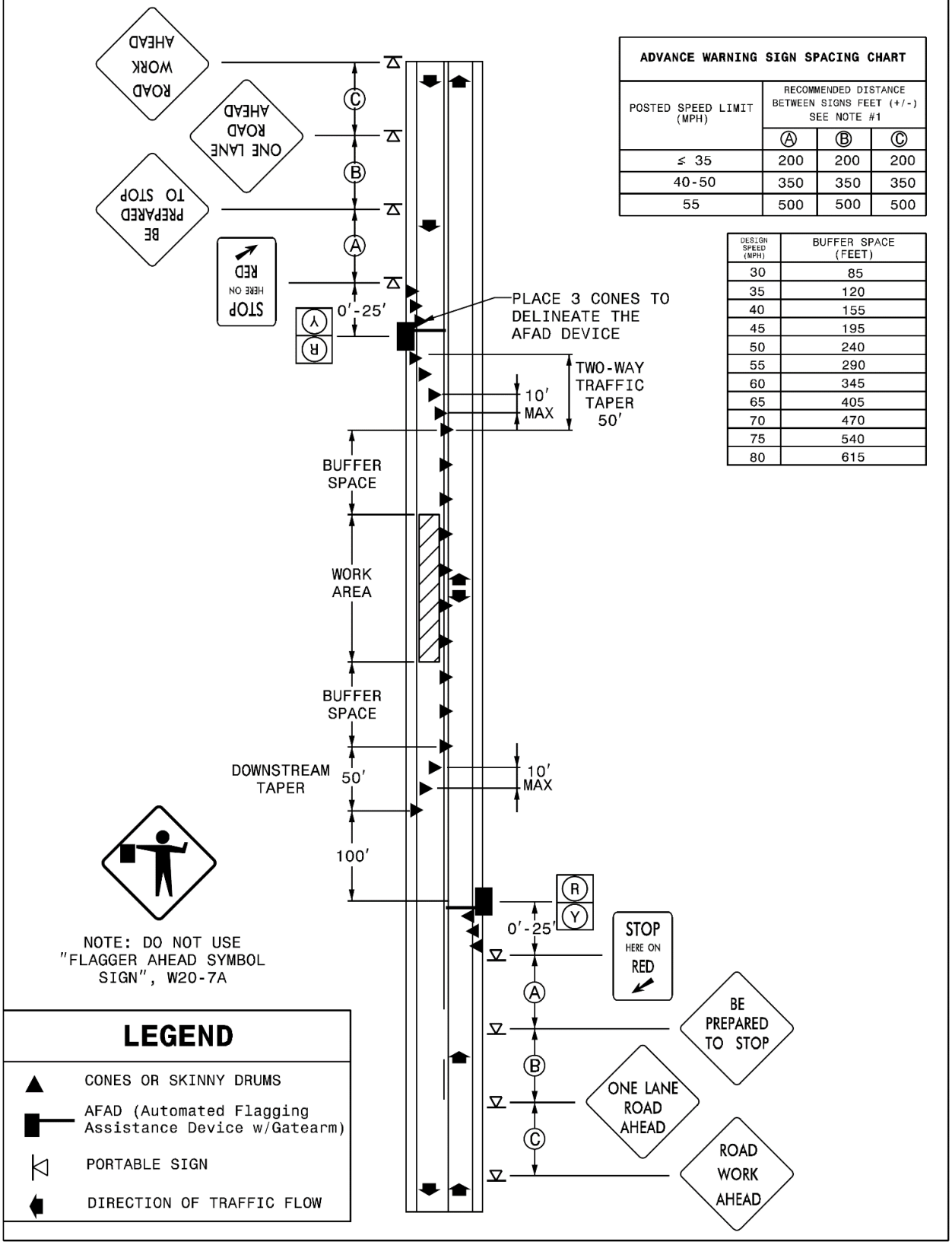

ADVANCE WARNING SIGN SPACING CHART			
POSTED SPEED LIMIT (MPH)	RECOMMENDED DISTANCE BETWEEN SIGNS FEET (+/-) SEE NOTE #1		
	Ⓐ	Ⓑ	Ⓒ
≤ 35	200	200	200
40-50	350	350	350
55	500	500	500

DESIGN SPEED (MPH)	BUFFER SPACE (FEET)
30	85
35	120
40	155
45	195
50	240
55	290
60	345
65	405
70	470
75	540
80	615

Stop/Slow AFAD (TYPE II)

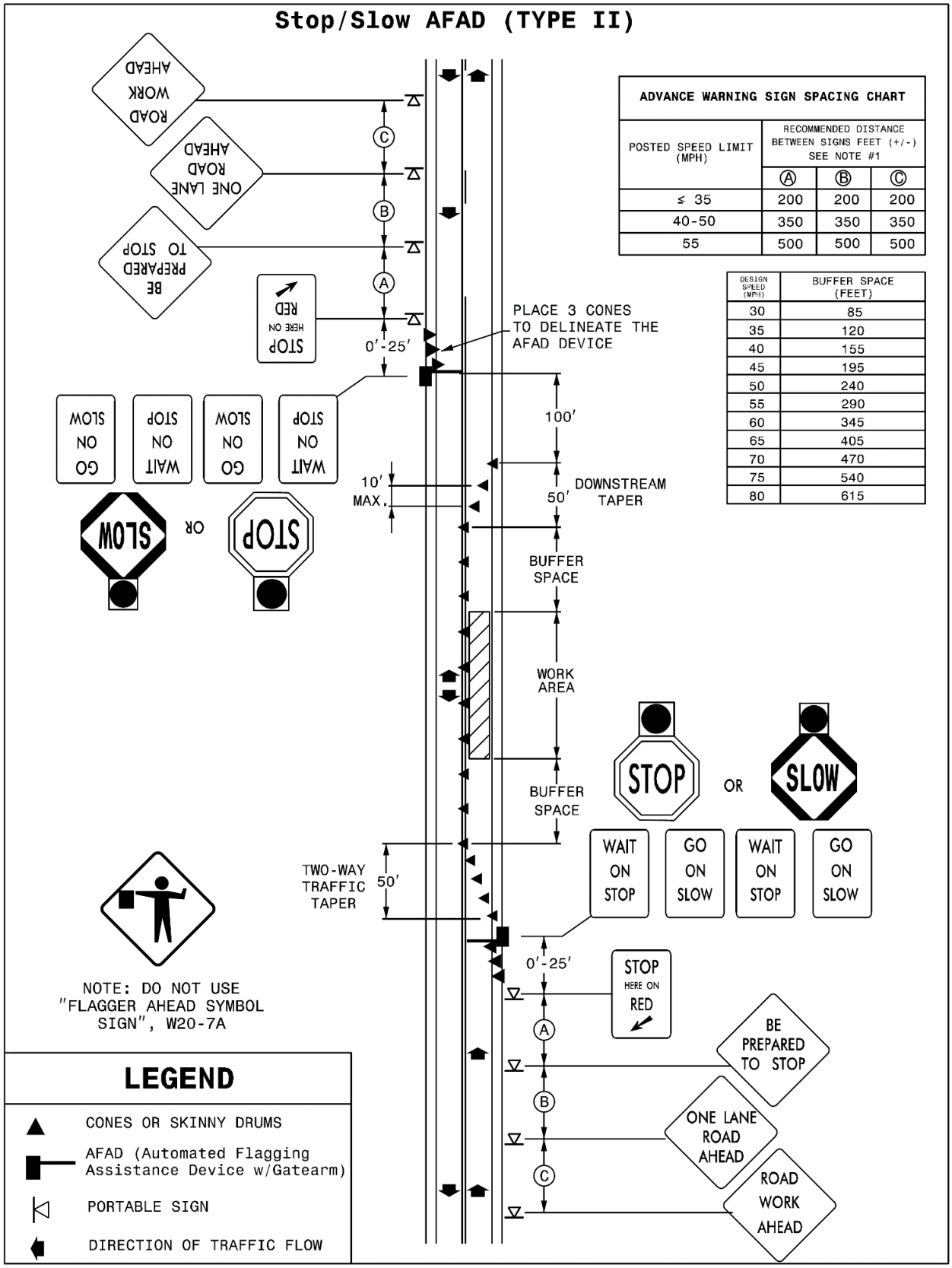

NOTE: DO NOT USE "FLAGGER AHEAD SYMBOL SIGN", W20-7A

ADVANCE WARNING SIGN SPACING CHART

POSTED SPEED LIMIT (MPH)	RECOMMENDED DISTANCE BETWEEN SIGNS FEET (+/-) SEE NOTE #1		
	Ⓐ	Ⓑ	Ⓒ
≤ 35	200	200	200
40-50	350	350	350
55	500	500	500

DESIGN SPEED (MPH)	BUFFER SPACE (FEET)
30	85
35	120
40	155
45	195
50	240
55	290
60	345
65	405
70	470
75	540
80	615

LEGEND

- CONES OR SKINNY DRUMS
- AFAD (Automated Flagging Assistance Device w/Gatearm)
- PORTABLE SIGN
- DIRECTION OF TRAFFIC FLOW

PAVEMENT MARKINGS:
(5-19-26)(Rev. 11-17-26) 1087, 1205 SP12 R04

Revise the *Standard Specifications* as follows:

Page 10-185, Subarticle 1087-2(A) Paint Composition, line 15, replace "TT--P-1952" with "TT--P-1952, Type III".

Page 10-185, Subarticle 1087-2(C) Thermoplastic Composition, lines 28-33, replace the first through third paragraph and the table with the following:

(C) Thermoplastic and Integrated Multipolymer (IMP) Composition

Use thermoplastic alkyd/maleic pavement markings composed of the materials in Table 1087-1A and integrated multipolymer markings composed of the materials in Table 1087-1B.

TABLE 1087-1A
PHYSICAL PROPERTIES
OF THERMOPLASTIC PAVEMENT MARKINGS

Component	By Weight
Alkyd/Maleic Binder	18.0% Min
Premixed Glass Beads (AASHTO M 247 – 50% Type 3 and 50% Type 1)	40.0% Min
Titanium Dioxide Pigment (ASTM D476 Type 2)	10.0% Min. (white) 1.5% Min. (yellow)

TABLE 1087-1B
PHYSICAL PROPERTIES
OF INTEGRATED MULTIPOLYMER (IMP) PAVEMENT MARKINGS

Component	By Weight
Binder	21.0% Min
Premixed Glass Beads (AASHTO M 247 – 50% Type 3 and 50% Type 1)	40.0% Min
Titanium Dioxide Pigment (ASTM D476 Type 2)	10.0% Min. (white only)
Inert Filler	15% Max white / 24% Max Yellow

Use white material that does not contain anatase titanium dioxide pigment. Use yellow material that does not contain any intentionally added lead chromate.

Calcium carbonate and inert fillers may be used by the manufacturer, providing all other qualifications are met.

Page 10-185, Subarticle 1087-2(C) Thermoplastic Composition, line 34, replace "thermoplastic" with "material".

Page 10-185, Subarticle 1087-2(C) Thermoplastic Composition, line 36, replace "alkyd/maleic

binder" with "binder".

Page 10-185, Subarticle 1087-2(C) Thermoplastic Composition, line 38, replace "maleic-modified glycerol of resin" with "rosin ester".

Page 10-186, Subarticle 1087-2(C) Thermoplastic Composition, insert the following paragraph after line 2:

The integrated multipolymer binder shall consist of a mixture of modified rosin ester, polyamide and a copolymer (e.g. EVA) with waxes and/or plasticizers. At least 3% of the total formulation weight shall be 100% polyamide. The binder shall contain no petroleum hydrocarbon resins.

Page 10-186, Subarticle 1087-2(C) Thermoplastic Composition, lines 3, 6, 9 and 11, replace "thermoplastic material" with "material".

Page 10-186, Article 1087-3 COLOR, after line 27, replace "Crystal: Color No. 17886 (White)" with "White: Color No. 17925".

Page 10-186, Subarticle 1087-4(A) Composition, lines 31-34, replace the second paragraph with the following:

Manufacture the beads from 100% recycled or virgin non-pigmented glass from a composition designed to be highly resistant to traffic wear and to the effects of weathering. All intermix and drop-on glass beads shall be manufactured using 100% North American recycled glass cullet, virgin North American glass or a combination of the two.

Page 10-187, Subarticle 1087-4(C) Gradation & Roundness, lines 4-6, replace the first paragraph and table with the following:

Use drop-on and intermixed glass beads in all pavement markings with at least 80% true spheres when tested in accordance with ASTM D1155. Drop-on glass beads for permanent pavement markings shall be high performance glass beads listed on the NCDOT APL. If otherwise specified, or at the direction of the Engineer, other drop-on reflective media may be used on permanent markings. Drop-on glass beads used on any interim or temporary pavement markings shall meet Table 1087-2.

TABLE 1087-2
GLASS BEAD GRADATION REQUIREMENTS

Sieve Size	Gradation Requirements	
	Minimum	Maximum
Passing #20	95%	100%
Retained on #30	5%	20%
Retained on #50	40%	80%
Retained on #80	15%	50%
Passing #80	0%	10%
Retained on #200	0%	5%

Page 10-187, Article 1087-5 PACKAGING FOR SHIPMENT, line 31, replace "Thermoplastic

pavement marking materials" with "Thermoplastic and integrated multipolymer pavement marking materials".

Page 10-188, Subarticle 1087-7(B) Thermoplastic Pavement Marking Material Composition, line 17, replace **"(B) Thermoplastic Pavement Marking Material Composition**" with "**(B) Thermoplastic and Integrated Multipolymer Pavement Marking Material Composition**".

Page 10-188, Subarticle 1087-7(C) Flash Point, line 22, replace "thermoplastic" with "thermoplastic and integrated multipolymer material".

Page 10-188, Subarticle 1087-7(D) Requirements, line 25, replace "thermoplastic material" with "thermoplastic and integrated multipolymer material".

Page 10-189, Subarticle 1087-7(D), after line 15, add the following:

(9) Tensile Elongation

The integrated multipolymer material shall have an elongation of at least 10% when tested in accordance with ASTM D638 (1"x 6", 0.25"/min).

(10) Abrasion Resistance

The integrated multipolymer material shall have no more than 0.40 g weight loss following taber abrasion with CS17 wheels for 1000 cycles with 1 kg weight per ASTM D4060.

Page 10-189, Article 1087-8 MATERIAL CERTIFICATION, lines 22-23, replace the third paragraph with the following:

Reflective media not covered in this, or other specifications must meet AASHTO M 247 Type 3 or 4 and a NCDOT Type 2 Material Certification must be provided.

Page 10-189, Article 1087-8 MATERIAL CERTIFICATION, after line 23, add the following to the table:

Integrated Multipolymer	Type 2 Material Certification and Type 3 Material Certification

Page 12-3, Subarticle 1205-3(F) Surface Preparation and Curing Compound Removal, line 8, add the following as a second sentence of the first paragraph:

Only apply markings to dry clean surfaces.

Page 12-4, Subarticle 1205-3(G)(1) General for all types of Pavement Markings, line 16, replace the first sentence of the eighth paragraph with the following:

Protect the pavement markings until they are track free before exposing them to traffic.

Page 12-4, Subarticle 1205-3(G)(1) General for all types of Pavement Markings, lines 22-24,

delete the second sentence of the tenth paragraph.

Page 12-4, Subarticle 1205-3(G)(1) General for all types of Pavement Markings, after line 24, replace "White: Color No. 17886" with "White: Color No. 17295".

Page 12-5, Subarticle 1205-3(I) Removal of Pavement Markings, line 32, add the following as the third sentence of the seventh paragraph:

Before applying integrated multipolymer (IMP) pavement markings over existing thermoplastic pavement markings, remove at least 85% of the oxidized existing thermoplastic.

Page 12-5, Subarticle 1205-3(I) Removal of Pavement Markings, line 35, replace "thermoplastic" with "thermoplastic or IMP".

Page 12-6, Article 1205-4 THERMOPLASTIC, line 3, replace "**1205-4 THERMOPLASTIC**" with **"1205-4 THERMOPLASTIC AND INTEGRATED MULTIPOLYMER (IMP)".**

Page 12-6, Subarticle 1205-4(A) Application Equipment, lines 7, 16, 20, 24, 25, 27 and 29, delete "thermoplastic"

Page 12-6, Subarticle 1205-4(B) Weather Limitations and Seasonal Limitations, line 38, replace "thermoplastic pavement markings" with "thermoplastic or integrated multipolymer pavement markings".

Page 12-6, Subarticle 1205-4(B) Weather Limitations and Seasonal Limitations, line 42, delete "thermoplastic".

Page 12-7, Subarticle 1205-4(C) Application, lines 2, 3, 10, 21 and 31, delete "thermoplastic".

Page 12-7, Subarticle 1205-4(C) Application, after line 17, in Table 1205-2 MINIMUM REFLECTOMETER REQUIREMENTS FOR THERMOPLASTIC replace "Standard Glass Beads" with "High Performance Glass Beads" and for the Reflectivity of White replace "375 mcd/lux/m^2" with "425 mcd/lux/m^2" and Yellow replace "250 mcd/lux/m^2" with "325 mcd/lux/m^2"

Page 12-7, Subarticle 1205-4(C) Application, line 23, replace "thermoplastic pavement marking" with "final pavement marking".

Page 12-7, Subarticle 1205-4(C) Application, after line 32, replace "**TABLE 1205-3 THICKNESS REQUIREMENTS FOR THERMOPLASTIC**" with "**TABLE 1205-3 THICKNESS REQUIREMENTS FOR THERMOPLASTIC AND INTEGRATED MULTIPOLYMER**".

Page 12-9, Subarticle 1205-5(C) Observation Period, before line 1, replace "375 mcd/lux/m^2" with "425 mcd/lux/m^2" and replace "250 mcd/lux/m^2" with "325 mcd/lux/m^2".

Page 12-11, Subarticle 1205-8(C) Application, lines 17-20, replace the first paragraph with the following:

Final pavement marking application of paint shall be placed in 1 application of 30 mils wet and consist of reflective media applied at a rate to immediately obtain the minimum retroreflective values.

Page 12-11, Subarticle 1205-8(C) Application, line 26, delete "15 mil".

Page 12-11, Subarticle 1205-8(C) Application, after line 31, replace Table 1205-6 with the following:

TABLE 1205-6
REFLECTOMETER REQUIREMENTS
FOR PAINT

Item	Color	Reflectivity
Standard Glass Beads	White	225 mcd/lux/m^2
	Yellow	200 mcd/lux/m^2
High Performance Glass Beads	White	425 mcd/lux/m^2
	Yellow	325 mcd/lux/m^2

Page 12-12, Article 1205-10 MEASUREMENT AND PAYMENT, lines 5-7, delete and replace the second sentence of the first paragraph with the following:

In addition, *Paint Pavement Marking Lines* will be paid per linear foot for each 15 mil wet application placed in accordance with Subarticle 1205-8(C) for temporary pavement markings during temporary traffic patterns and in accordance with Subarticle 1205-8(C) final paint pavement marking lines of 1 application of 30 mils wet will be measured and paid as 2 applications of 15 mils wet.

Page 12-12, Article 1205-10 MEASUREMENT AND PAYMENT, lines 12-14, delete and replace the second sentence of the second paragraph with the following:

In addition, *Paint Pavement Marking Symbols* will be paid for each 15 mil wet application placed in accordance with Subarticle 1205-8(C) for temporary pavement markings during temporary traffic patterns and in accordance with Subarticle 1205-8(C) final paint pavement marking symbols of 1 application of 30 mils wet will be measured and paid as 2 applications of 15 mils wet.

Page 12-12, Article 1205-10 MEASUREMENT AND PAYMENT, lines 17-19, delete and replace the third sentence of the third paragraph with the following:

In addition, *Paint Pavement Marking Characters* will be paid for each 15 mil wet application placed in accordance with Subarticle 1205-8(C) for temporary pavement markings during temporary traffic patterns and in accordance with Subarticle 1205-8(C) final paint pavement marking characters of 1 application of 30 mils wet will be measured and paid as 2 applications of 15 mils wet.

Page 12-12, Article 1205-10 MEASUREMENT AND PAYMENT, lines 17-19, replace the second sentence of the ninth paragraph with the following:

No direct payment will be made for the work involved in applying the lines, including but not limited to surface preparation, reapplication of molten pavement marking crossed by a vehicle, removal of all pavement marking materials spilled on the roadway surface, and repair of markings tracked by a vehicle.

Page 12-13, Article 1205-10 MEASUREMENT AND PAYMENT, after line 12, add the following to the pay item and pay unit list:

Pay Item	**Pay Unit**
Integrated Multipolymer Pavement Marking Lines, __", __ mils	Linear Foot
Integrated Multipolymer Pavement Marking Symbols, __ mils	Each
Integrated Multipolymer Pavement Marking Characters, __ mils	Each

REMOVE 2'-6" CONCRETE CURB & GUTTER:

(11-19-24) 1660 SPI 8-55

Description

Remove existing 2'-6" concrete curb & gutter in accordance with the plans, this special provision and as directed by the Engineer.

Construction Methods

Sawcut, break up, remove and satisfactorily dispose of the existing 2'-6" concrete curb & gutter to the nearest concrete joint within the limits shown in the plans or as directed by the Engineer. Backfill with suitable soil and seed and mulch the disturbed area in accordance with Section 1660 of the *Standard Specifications*.

In locations where curb and gutter removal is to address ADA curb ramp compliance, sidewalks, curb ramps, and other flatwork will be paid for as found elsewhere in the contract. Such locations will be indicated on the plans or directed by the Engineer.

Dispose of existing 2'-6" concrete curb & gutter in accordance with federal, state and local regulations will be incidental to the work.

Measurement and Payment

Remove 2'-6" Concrete Curb & Gutter will be measured and paid for in units of linear feet for the actual number of liner feet that have been completed and accepted. Such price and payment includes, but is not limited to, providing all materials, removal and disposal of existing curb & gutter, excavating and backfilling, seeding, mulching the disturbed area, and all incidentals necessary to complete the work. Required sidewalks, curb ramps, and other flatwork installed in lieu of backfilling with soil will be paid for as found elsewhere in the contract.

Payment will be made under:

Pay Item	Pay Unit
Remove 2'-6" Concrete Curb & Gutter	Linear Foot

CONCRETE WASHOUT:
(10-22-15)(Rev. 4-15-25)

Description

Concrete washouts are impermeable enclosures, above or below grade, to contain concrete wastewater and associated concrete mix from cleaning of ready-mix trucks, drums, pumps, tools or other equipment. Concrete washouts must collect and retain all the concrete washout water and solids, so that this material does not migrate to surface waters or into the ground water. These enclosures are not intended for concrete waste not associated with washout operations.

Acceptable concrete washouts may include constructed earthen structures, above or below ground, or commercially available devices designed specifically to capture concrete wash water.

Materials

Refer to Division 10 of the *Standard Specifications*.

Item	Section
Temporary Silt Fence	1605

Safety Fence shall meet the specifications as provided elsewhere in this contract.

Geomembrane basin liner shall consist of a minimum 10 mil thick polypropylene or polyethylene geomembrane.

Construction Methods

Build an enclosed earthen berm or excavate to form an enclosure in accordance with the details and as directed by the Engineer near the project entrance(s) or at location(s) of concrete operations. Structures shall be constructed a minimum of 50 feet from drainage conveyances or jurisdictional streams or wetlands. Alternate structure designs or plans for management of concrete washout may be submitted for review and approval by the Engineer. Include in the alternate plan the method used to retain, treat and dispose of the concrete washout wastewater generated within the project limits and in accordance with the minimum setback requirements.

Install temporary silt fence around the perimeter of the structure enclosure in accordance with the details and as directed by the Engineer if the structure is not located in an area where existing erosion and sedimentation control devices are capable of containing stormwater runoff.

Post a sign with the words "Concrete Washout" in close proximity of the concrete washout area, so it is clearly visible to site personnel. Install safety fence as directed by the Engineer for visibility to construction traffic.

Install prefabricated concrete washouts, designed specifically to capture concrete wash water, at locations of additional concrete pouring operations. Acceptable systems may include geotextile lined containers, vinyl or plastic containers or roll-off containers, with or without filter bags with a minimum functional holding capacity of 36 cubic feet (1.33 cubic yards). Submit prefabricated concrete washout system for approval by the Engineer prior to installation. Place prefabricated concrete washout devices to a minimum 50 foot setback from drainage conveyances and jurisdictional streams and wetlands. If the minimum setback cannot be achieved, provide secondary containment to prevent accidental release of wastewater from reaching drainage conveyances or streams.

Prefabricated concrete washouts must be clearly and visibly labeled as such, either by the manufacturer on the product itself, or by a sign with the words "Concrete Washout" in close proximity of the concrete washout area so it is clearly visible to site personnel.

Maintenance and Removal

Maintain the concrete washout structure(s) to provide adequate holding capacity plus a minimum freeboard of 12 inches. Remove and dispose of hardened concrete and return the structure to a functional condition after reaching 75% capacity. Inspect concrete washout structures for damage to liner or structure to maintain functionality.

Maintain prefabricated concrete washout systems per manufacturer's recommendations. Inspect concrete washout structures for damage to linings or structure and repair or replace as necessary.

Remove the concrete washout structures and sign upon project completion. Grade the area to match the existing topography and permanently seed and mulch area. Dispose of prefabricated concrete washout structures according to state or local waste regulations.

Measurement and Payment

Concrete Washout Structure will be measured and paid per each enclosure installed in accordance with the details in the plans. If alternate plans or details are approved, those structures will also be paid for per each approved and installed structure. Such price and payment will be full compensation for all work including, but not limited to, furnishing all materials, labor, equipment, signage, slurry solidification and incidentals necessary to construct, maintain and remove *Concrete Washout Structure* and dispose of residual concrete washout wastewater and concrete solids.

Prefabricated Concrete Washout will be measured and paid per each system installed in accordance with the manufacturer's recommendations. Such price and payment will be full compensation for all work including, but not limited to, furnishing all materials, labor, equipment, signage, slurry solidification and incidentals necessary to install, maintain and remove *Prefabricated Concrete Washout*, and dispose of residual concrete washout wastewater and concrete solids.

Temporary Silt Fence will be measured and paid for in accordance with Article 1605-5 of the *Standard Specifications*.

Safety Fence shall be measured and paid for as provided elsewhere in this contract.

No measurement will be made for over excavation or stockpiling or other items necessary to complete this work.

Payment will be made under:

Pay Item	**Pay Unit**
Concrete Washout Structure	Each
Prefabricated Concrete Washout	Each

Docusign Envelope ID: 63025F28-45AB-88C2-83BC-C06B0B79E4C1

TC-1

HS-2404V Johnston County

WORK ZONE TRAFFIC CONTROL
Project Special Provisions

LUMP SUM PAYMENT FOR TRAFFIC CONTROL:
(02/06/2013) LS-TC

The Contractor shall maintain traffic on **All ROADS** during construction and shall provide, install and maintain all traffic control devices as shown in the *Roadway Standard Drawings* and Project Traffic Management Plans or as directed by the Engineer.

The lump sum price bid for traffic control shall include but not be limited to **Signs (portable, stationary, or barricade), which includes detour signing, Changeable Message Signs (CMS), Flashing Arrow Boards (FAB), Pilot Vehicle, Flaggers, Barricades, Cones, Skinny Drums, Drums, Pedestrian Channelizing Devices and Audible Warning Devices** and all labor, tools, equipment and incidentals necessary to furnish, install, maintain and remove traffic control devices when no longer required.

Basis of Payment

Partial payments will be made on each payment estimate based on the following: Fifty percent of the contract lump sum price bid will be paid on the first monthly estimate and the remaining 50% of the contract lump sum price bid will be paid on each subsequent estimate based on the percent of the project completed.

Payment will be made under:

Pay Item	**Pay Unit**
Temporary Traffic Control	Lump Sum

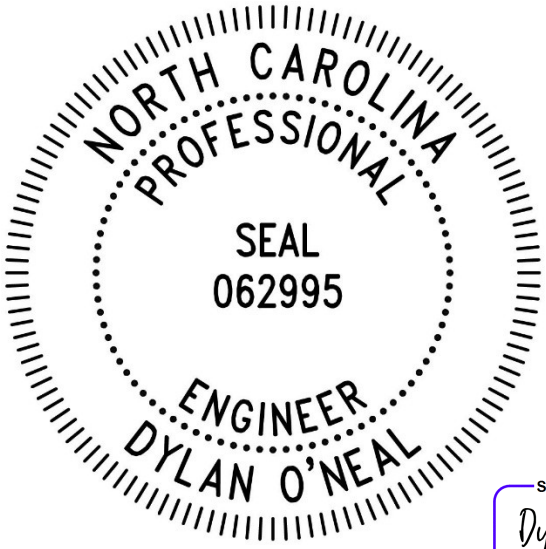

Signed by:
Dylan O'Neal
D53597E73B4D431...
10/20/2026

TC-2

DD00548 HS-2404V Johnston County

ADA COMPLIANT PEDESTRIAN TRAFFIC CONTROL DEVICES

(10/31/2017) (Rev. 6/3/2022) (revised)

Description

Furnish, install, and maintain all ADA compliant pedestrian traffic control devices for existing pedestrian facilities that are disrupted, closed, or relocated by planned work activities.

The ADA compliant pedestrian traffic control devices used to either close, redirect, divert or detour pedestrian traffic are Pedestrian Channelizing Devices, Audible Warning Devices and Temporary Curb Ramps.

Construction Methods

The ADA compliant pedestrian traffic control devices involved in the closing or redirecting of pedestrians as designated on the Transportation Management Plan (TMP) shall be manufactured and assembled in accordance with the requirements of the Americans with Disabilities Act (ADA) and be on the NCDOT approved products list.

Pedestrian Channelizing Devices shall be manufactured and assembled to be connected as to eliminate any gaps that allow pedestrians to stray from the channelizing path. Any Pedestrian Channelizing Devices used to close or block a pedestrian facility shall have a "SIDEWALK CLOSED" sign affixed to it and any audible warning devices, if designated on the TMP.

Audible Warning Devices shall be manufactured to include a locator tone activated by a motion sensor and have the ability to program a message for a duration of at least 1 minute. The motion sensor shall have the ability to detect pedestrians a minimum of 10 feet away. The voice module may be automatic or it may be push button activated. If push button activated, it shall be mounted at a height of approximately 3.5 feet, but no more than 4 feet, above the pedestrian facility.

Temporary Curb Ramps shall be manufactured and assembled to meet all of the requirements for persons with walking disabilities, including wheelchair confinement, according to the ADA regulations. All detectable warning features are to be included with these installations.

Measurement and Payment

Pedestrian Channelizing Devices will be measured and paid as the maximum number of linear feet of *Pedestrian Channelizing Devices* furnished, acceptably placed, and in use at any one time during the life of the project.

No direct payment will be made for any sign affixed to a pedestrian channelizing device. Signs mounted to pedestrian channelizing devices will be considered incidental to the device.

Audible Warning Devices will be measured and paid as the maximum number of *Audible Warning Devices* furnished, acceptably installed, and in use at any one time during the life of the project.

Relocation, replacement, repair, maintenance, or disposal of *Pedestrian Channelizing Devices* and *Audible Warning Devices* will be incidental to the pay item.

Temporary Curb Ramps will be measured and paid as the actual number of *Temporary Curb Ramps* furnished, acceptably installed, and in use. *Temporary Curb Ramps* will be paid for each time a curb ramp is moved from one location on the project to another location on the project.

No direct payment will be made as these items are considered incidental to the Temporary Traffic Control.

Docusign Envelope ID: 60E70260-46F6-86C2-81D4-8551BAE0FC9D

PROJECT SPECIAL PROVISIONS
Utility Construction

Weston & Sampson℠
WSE of North Carolina, PC
2052 Energy Drive
Apex, NC 27502
Phone: 919.297.0220
NC License: C-4647

NORTH CAROLINA PROFESSIONAL SEAL 39283 ENGINEER KEVIN S. HUTCHENS

Signed by:
Kevin S. Hutchens
2879EE72F10E430...

10/19/2026
(Seal)

DOCUMENT NOT CONSIDERED FINAL UNLESS ALL SIGNATURES COMPLETED

Where brand names and model numbers are specified in these Special Provisions or in the plans, the cited examples are used only to denote the quality standard of product desired and do not restrict bidders to a specific brand, make, or manufacturer. They are provided to set forth the general style, type, character, and quality of the product desired. Equivalent products will be acceptable.

The utility owner is the Town of Smithfield. The contact person is Ted Credle, and he can be reached by phone at (919) 934-2798.

The provisions contained within these Utilities Construction Project Special Provisions modify the *Standard Specifications* only for materials used and work performed constructing water facilities owned by Town of Smithfield.

Docusign Envelope ID: 60E70260-46F6-86C2-81D4-8551BAE0FC9D

REMOVE AND STOCKPILE FIRE HYDRANT

Construction Methods:

The existing fire hydrants to be removed and stockpiled will be separated at the hydrant base from the existing pipe and stockpiled in an area accessible by truck or as directed by the Engineer.

After the fire hydrant is stockpiled, the Contractor shall contact the utility and arrange for the utility to receive and remove the fire hydrants.

Measurement and Payment:

The quantity of fire hydrants removed, stockpiled, and accepted, will be measured and paid for at the contract unit price per each for *Remove and Stockpile Fire Hydrant*. All labor, excavation, removal, stockpiling, and incidentals necessary to complete the work as required are incidental to *Remove and Stockpile Fire Hydrant*.

Pay Item:	**Pay Unit**
Remove and Stockpile Fire Hydrant	Each

Docusign Envelope ID: DB3D6260-3BD0-8DC6-815C-0C49C463F240

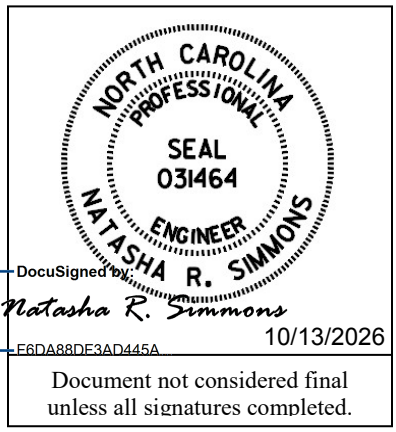

Signals and Intelligent Transportation Systems
Project Special Provisions
(Version 24.4)

Prepared By: NRS
29-Sep-26

Contents

1. 2024 STANDARD SPECIFICATIONS FOR ROADS & STRUCTURES 3
1.1 ELECTRICAL JUNCTION BOXES (1091-5) 3
1.2 TRAFFIC SIGNAL ACTIVATION (1700-4) 3
1.3 PEDESTALS (1098-15) 3
2. SIGNAL HEADS 7
2.1. MATERIALS 7
A. General 7
B. Vehicle Signal Heads 9
C. Pedestrian Signal Heads 11
3. CONTROLLERS WITH CABINETS 12
3.1 MATERIALS – TYPE 2070LX CONTROLLERS 12
3.2 MATERIALS – GENERAL CABINETS 13
3.3 MATERIALS – TYPE 170E CABINETS 14
A. Type 170 E Cabinets General 14
B. Type 170 E Cabinet Electrical Requirements 14
C. Type 170 E Cabinet Physical Requirements: 21
D. Model 2018 Enhanced Conflict Monitor 22
3.4 MATERIALS – TYPE 170 DETECTOR SENSOR UNITS 32
4. PUSH BUTTON INTEGRATED ACCESSIBLE PEDESTRIAN SIGNAL (APS) 32
4.1 DESCRIPTION 32
4.2 MATERIALS 33
4.3 CONSTRUCTION METHODS 34
4.4 MEASUREMENT AND PAYMENT 34
5. NON-INTRUSIVE DETECTION SYSTEMS 35
5.1 DESCRIPTION 35
A. General 35
5.2 MATERIALS 35
A. General 35
5.3 CONSTRUCTION METHODS 41
A. Construction 41
B. Quality Acceptance/Testing 43
C. Contractor Warranty and Maintenance 44
5.4 MEASUREMENT AND PAYMENT 44
6. PROTECTIVE COATING FOR METAL POLES 45
6.1 GENERAL 45
6.2 DESCRIPTION 45
6.3 MATERIALS 45

Docusign Envelope ID: DB3D6260-3BD0-8DC6-815C-0C49C463F240

6.4 FACILITY APPROVAL 45
6.5 POWDER COATING 47
A. Galvanizing 47
B. Surface Preparation 47
C. Powder Coating Application and Curing 47
D. Quality Control 48
E. Storage, Shipping, and Handling 48
F. Repair of Powder Coated Material 48
6.6 ACRYLIC PRIMER AND TOPCOAT PAINT SYSTEM 48
A. Description 48
B. Surface Preparation 49
C. Materials 49
D. Painting 49
E. Curing 50
F. Inspection 50
G. Handling 50
H. Repair of Damaged Coating 50
6.7 MEASUREMENT AND PAYMENT 51

Docusign Envelope ID: DB3D6260-3BD0-8DC6-815C-0C49C463F240

1. 2024 STANDARD SPECIFICATIONS FOR ROADS & STRUCTURES

The 2024 Standard Specifications are revised as follows:

1.1 ELECTRICAL JUNCTION BOXES (1091-5)

Page 10-209, revise paragraphs beginning on line 26 to read "Provide electrical junction boxes with covers of the type and size indicated by the contract or plans for the termination of conduits. Boxes and covers shall meet all requirements and specifications of ANSI/SCTE 77. Structural load tests shall meet the Tier 15 application type.

Page 10-209, line 28, revise title of section 1091-5(B) from “Polymer Concrete (PC) Junction Boxes” to “Polymer Concrete (PC), Composite, and Thermoplastic Junction Boxes”.

Page 10-209, revise paragraphs beginning on line 29 through line 41 to read “For PC junction boxes, use polymer concrete material made of an aggregate consisting of sand and gravel bound together with a polymer and reinforced with glass strands to fabricate box and cover components.

Provide junction boxes which have bolted covers and open bottoms. Provide vertical extensions of 6 inches to 12 inches as required by project provisions.

Provide the required logo on the cover. Provide at least two size 3/8 inch diameter hex head stainless steel cover bolts to match inserts in the box. Provide pull slot(s) with stainless steel pin(s). Bodies of junction boxes shall be a single piece.

Polymer concrete, composite, and thermoplastic junction boxes are not required to be listed electrical devices.”

1.2 TRAFFIC SIGNAL ACTIVATION (1700-43)

Page 17-4, revise paragraph beginning on line 42 through line 46 to read “Prior to placing signal in the steady (stop-and-go) mode, the signal should be placed in yellow-red flashing mode for up to 7 days or as directed by the Engineer. Yellow-red flashing mode differs from the red-red flashing mode shown in the signal plan. Yellow-red flash mode includes flashing the yellow signal indications on all main street through movements while flashing the red signal indications on all side street signal heads and any left turn heads on the main street. The signal should not be placed in the steady (stop-and-go) mode on a Saturday or Sunday without prior approval from the Engineer. Do not place the signal in steady (stop-and-go) mode until inspected and without prior approval of the Engineer.”

1.3 PEDESTALS (1098-15)

Pages 10-226 through 10-230, revise section 1098-15 beginning on page 10-226 line 17 through page 10-230 line 10 to read “Furnish pedestal assemblies and their components that are pre-approved on the ITS & Signals QPL with foundations that conform to the *AASHTO Standard Specifications for Structural Supports for Highway Signs, Luminaires, and Traffic Signals*, and the Interim Specifications as shown on the plans. Refer to *Roadway Standard Drawings* No. 1743 for structural design specifications for each type of pedestal.

(A) Pedestal Shaft

Furnish one piece pedestal shafts fabricated from either aluminum or galvanized steel pipe with a uniform pipe outer diameter of 4.5 inches and of the lengths specified for the type of pedestal shown on *Roadway Standard Drawing No.* 1743. Refer to Article 1743-2 for pedestal type descriptions.

Docusign Envelope ID: DB3D6260-3BD0-8DC6-815C-0C49C463F240

For Type I (pedestrian pushbutton pedestals) and Type II (normal-duty pedestals), furnish shafts constructed from schedule 40 extruded aluminum pipe that conforms to Aluminum Association Alloy 6061-T6 with a tensile strength of 30 ksi and a minimum wall thickness of 0.237 inch. Aluminum conduit will not develop the necessary strength required and is not allowed. Thread and deburr in accordance with American National Standard Pipe Threads, NPT (ANSI B2.1). Finish the exterior with a rough surface texture consisting of a uniform grain pattern that is perpendicular to the axis of the pipe along the full pipe length. Unless otherwise specified, do not use galvanized steel pipe for Type I and Type II pedestal shafts.

(B) Transformer Bases

Furnish transformer bases for each type of pedestal shown on *Roadway Standard Drawings* No. 1743 fabricated from aluminum that meets Aluminum Association Alloy 356 or equivalent, and that are designed to break upon impact in accordance with AASHTO requirements. Pre-approved transformer base shape, size, and bolt circle dimensions may vary by product supplier, but are structurally qualified for use by each pedestal type. Compliance with manufacturer's installation instructions is crucial to ensure optimal performance when impacted.

Provide a 0.5 inch minimum diameter, coarse thread hole cast into transformer base located inside of base and oriented for easy access for use in grounding and bonding.
Provide an access opening for all transformer bases with an access door that is attached with a 1/4 inch x 3/4 inch long stainless steel vandal proof screw to secure access door.

For Type I (pedestrian pushbutton pedestals) and Type II (normal-duty pedestals), provide a threaded opening at the top of the base to receive a 4 inch NPT pipe shaft. Include a set screw prep and 3/8 inch-16 x 1 inch stainless steel set screw to secure the pedestal post to the pedestal base. Fabricate the bottom of the transformer base with four equally spaced holes or slots to secure the entire assembly to the concrete foundation.

(C) Anchor Bolts

For each pedestal mounted on a concrete foundation, provide four anchor bolts in accordance with ASTM F1554, Grade 55, of the size and length specified in *Roadway Standard Drawings* No. 1743. Provide anchor bolts with coarse threads meeting the bolt/thread criteria specified by AISC. Provide threads for a minimum length of 4 inches on each end of the bolt. All thread anchor rods may be used. Ensure anchor bolts are hot-dipped galvanized in accordance with ASTM A153.

For each anchor bolt:

(1) Provide three heavy hex nuts; one at the top, and two at the bottom (embedded end) of the anchor bolt. Provide hex nuts with coarse threads that match the anchor bolt thread requirements above. Provide hex nuts that meet the requirements of ASTM A563 Grade DH, ASTM A194, Grade 2H or equivalent. Galvanize all heavy hex nuts in accordance with ASTM A153.

Docusign Envelope ID: DB3D6260-3BD0-8DC6-815C-0C49C463F240

(2) Provide one standard size washer that meets the requirements of ASTM F436 for use between the two heavy hex nuts on the embedded end of the anchor bolt. Galvanize in accordance with ASTM A153.

(3) Provide one extra thick, oversized washer for use over the slotted opening of the pedestal base. Fabricate washer to meet the chemical, physical, and heat treating requirements of ASTM F436. Fabricate the washer to the diameter and thickness needed. Galvanize fabricated washer in accordance with ASTM A153. Heat treat to the same requirements as F436 (i.e. 26 to 45 HRC).

For a 3/4 inch diameter anchor bolt mounted in a 1 1/2 inch slotted opening, the dimensional requirements for an extra thick, oversized washer are as follows:

(a) The minimum Outside Diameter (OD) required is 2 3/4 inch.
(b) The hole Inside Diameter (ID) = Nominal Bolt Diameter + 1/16 inch = 0.812 inch.
(c) The minimum washer thickness required is 3/8 inch.

If anchor bolts less than 3/4 inch in diameter are proposed for use to anchor pedestal bases, provide a washer calculation to ensure the washer thickness is adequate. To account for any pedestal manufacturing differences, verify the actual slotted opening width of the pedestal base anchoring points, and include it in the calculation. Anchor bolts that are less than 1/2 inch in diameter may not be used as they are not structurally adequate to support the pedestal and may inhibit the performance of the breakaway base.
The fabrication process for thick washers makes the washer slightly tapered (i.e. the top OD and the bottom OD are not the same). Install thick washers with the larger diameter face down against the pedestal base casting.

Do not use standard washers over the slotted opening of the pedestal base. Do not substitute or stack thin washers to achieve the required thickness specified or required.

In addition to the submittal requirements of Section 1098-1(B), provide Mill Certifications, Galvanization Certifications, and Heat Treating Certifications for all anchor bolts, fabricated washers, and structural hardware.

(D) Pedestal Cap

Furnish a 4 1/2 inch outside diameter slip fit domed pedestal top cap for each pedestal assembly designed to fit over the outside of the pedestal shaft. Fabricate the cap from aluminum that meets Aluminum Association Alloy 356. Ensure the cap provides 3 equally spaced stainless steel set screw fasteners to secure the cap to the pedestal shaft.

(E) Pole Flange Base for 4 1/2 Inch Pipe

As an alternative to using a frangible transformer base, furnish a flange base with cover for use with Type I pedestrian pushbutton pedestals only. Flange bases are non-breakaway supports that are to be used with a breakaway bolt system for AASHTO compliance for breakaway structures. Provide aluminum or steel flange bases with a minimum 7.5 inch diameter bolt circle. Ensure bases are either continuously welded to shafts or threaded to receive shafts. Each base should be designed to accommodate either three or four 1/2 inch bolts equally spaced on the bolt circle to receive breakaway anchors. Provide NPT threads on the internal opening of the flange base

Docusign Envelope ID: DB3D6260-3BD0-8DC6-815C-0C49C463F240

through the full length of the flange base with locking set screws at the top of the base to receive a 4 inch NPT pipe shaft.

Fabricate aluminum flange bases that meet Aluminum Association Alloy 356 requirements for architectural bases. Fabricate steel flange bases that meet ASTM A36.

Do not use flange bases for Type II pedestals.

(F) Breakaway Anchors

Use breakaway anchors installed in concrete pedestal foundations as an alternative to transformer bases. Furnish single or double neck omni-directional breakaway anchor bolt coupling systems for use with Type I (pedestrian pushbutton pedestals) only. Use with non-breakaway pole flange bases. Use 1/2 inch diameter bolts for pushbutton posts. Fabricate from steel with a minimum yield strength of 55 ksi. Galvanize in accordance with ASTM A153. Do not use breakaway anchors with Type II or III pedestals, or in conjunction with breakaway transformer bases.

(G) Foundation

Install concrete pedestal foundations of the type and size shown on *Roadway Standard Drawings* No. 1743.04 Furnish Class A minimum concrete that conforms to Article 1000-4.

Provide reinforcing steel that conforms to the applicable parts of Section 1070.

(H) Screw-In Helical Foundation Anchor Assembly

Furnish and install screw-in helical foundation as an alternative to the standard reinforced concrete foundation specified in Section 1743, for supporting Type I and Type II Pedestals.

(1) Type I – Pedestrian Pushbutton Post:

Fabricate pipe assembly consisting of a 4 inch diameter x 56 inch long pipe, single helical blade and square fixed attachment plate. Furnish pipe in accordance with ASTM A53 ERW Grade B and include a 2 inch x 3 inch cable opening in the pipe at 18 inches below the attachment plate. Furnish steel attachment plate and helical blade in accordance with ASTM A36. Include four slotted mounting holes in the attachment plate to fit bolt circles ranging from 7 3/4 inches to 14 3/4 inches in diameter. Furnish additional 3/4 inch keyholes at slotted holes to permit anchor bolt installation and replacement from top surface. Include combination bolt-head retainer and dirt scrapers at the attachment plate underside to allow for a level or flush-mount plate installation with respect to the finished grade. Galvanize pipe assembly components in accordance with AASHTO M 111 or an approved equivalent.

Furnish four 3/4 inch 10NC x 3 inch square head anchor bolts to meet the requirements of ASTM F3125. Provide four 3/4 inch plain flat galvanized washers, four 3/16 inch thick galvanized plate washers and four 3/4 inch galvanized hex nuts. Galvanize in accordance with AASHTO M 111 or an approved equivalent.

(2) Type II – Normal-Duty Pedestal:

Fabricate pipe assembly consisting of a 6 inch diameter x 60 inch long, single helical blade, 1 1/4 inch diameter stinger rod and square fixed attachment plate. Furnish pipe in accordance with ASTM A53 ERW Grade B using schedule 40 wall thickness and include a 2 inch x 3

Docusign Envelope ID: DB3D6260-3BD0-8DC6-815C-0C49C463F240

inch cable opening in the pipe at 18 inches below the attachment plate. Furnish steel attachment plate, helical blade and stinger rod in accordance with ASTM A36. Include four slotted mounting holes in the attachment plate to fit bolt circles ranging from 10 inches to 15 inches in diameter. Furnish additional 1 1/4 inch keyholes at slotted holes to permit anchor bolt installation and replacement from top surface. Include combination bolt-head retainer and dirt scrapers at the attachment plate underside to allow for a level or flush-mount plate installation with respect to the finished grade. Galvanize pipe assembly components in accordance with AASHTO M 111 or an approved equivalent.

Furnish four 1 inch 8NC x 4 inch galvanized Grade 5 square head anchor bolts. Provide four 1 inch plain flat galvanized washers and four 1 inch galvanized hex nuts. Galvanize in accordance with AASHTO M 111 or an approved equivalent."

2. SIGNAL HEADS

2.1 MATERIALS

A. General

Fabricate vehicle signal head housings and end caps from die-cast aluminum. Fabricate 16-inch pedestrian signal head housings and end caps from die-cast aluminum. Provide visor mounting screws, door latches, and hinge pins fabricated from stainless steel. Provide interior screws, fasteners, and metal parts fabricated from stainless steel.

Fabricate tunnel and traditional visors from sheet aluminum.

Paint all surfaces inside and outside of signal housings and doors. Paint outside surfaces of tunnel and traditional visors, wire outlet bodies, wire entrance fitting brackets and end caps when supplied as components of messenger cable mounting assemblies, pole and pedestal mounting assemblies, and pedestrian pushbutton housings. Have electrostatically-applied, fused-polyester paint in highway yellow (Federal Standard 595C, Color Chip Number 13538) a minimum of 2.5 to 3.5 mils thick. Do not apply paint to the latching hardware, rigid vehicle signal head mounting brackets for mast-arm attachments, messenger cable hanger components or balance adjuster components.

Have the interior surfaces of tunnel and traditional visors painted an alkyd urea black synthetic baking enamel with a minimum gloss reflectance and meeting the requirements of MIL-E-10169, "Enamel Heat Resisting, Instrument Black."

Where required, provide polycarbonate signal heads and visors that comply with the provisions pertaining to the aluminum signal heads listed on the QPL with the following exceptions:

Fabricate signal head housings, end caps, and visors from virgin polycarbonate material. Provide UV stabilized polycarbonate plastic with a minimum thickness of 0.1 ± 0.01 inches that is highway yellow (Federal Standard 595C, Color Chip 13538). Ensure the color is incorporated into the plastic material before molding the signal head housings and end caps. Ensure the plastic formulation provides the following physical properties in the assembly (tests may be performed on separately molded specimens):

Docusign Envelope ID: DB3D6260-3BD0-8DC6-815C-0C49C463F240

Test	Required	Method
Specific Gravity	1.17 minimum	ASTM D 792
Flammability	Self-extinguishing	ASTM D 635
Tensile Strength, yield, PSI	8500 minimum	ASTM D 638
Izod impact strength, ft-lb/in [notched, 1/8 inch]	12 minimum	ASTM D 256

For pole mounting, provide side of pole mounting assemblies with framework and all other hardware necessary to make complete, watertight connections of the signal heads to the poles and pedestals. Fabricate the mounting assemblies and frames from aluminum with all necessary hardware, screws, washers, etc. to be stainless steel. Provide mounting fittings that match the positive locking device on the signal head with the serrations integrally cast into the brackets. Provide upper and lower pole plates that have a 1 ¼-inch vertical conduit entrance hubs with the hubs capped on the lower plate and 1 ½-inch horizontal hubs. Ensure that the assemblies provide rigid attachments to poles and pedestals so as to allow no twisting or swaying of the signal heads. Ensure that all raceways are free of sharp edges and protrusions, and can accommodate a minimum of ten Number 14 AWG conductors.

For pedestal mounting, provide a post-top slipfitter mounting assembly that matches the positive locking device on the signal head with serrations integrally cast into the slipfitter. Provide stainless steel hardware, screws, washers, etc. Provide a minimum of six 3/8 X 3/4-inch long square head bolts for attachment to pedestal. Provide a center post for multi-way slipfitters.

For light emitting diode (LED) traffic signal modules, provide the following requirements for inclusion on the Department's Qualified Products List for traffic signal equipment.

1. Sample submittal,
2. Third-party independent laboratory testing results for each submitted module with evidence of testing and conformance with all of the Design Qualification Testing specified in section 6.4 of each of the following Institute of Transportation Engineers (ITE) specifications:
   - Vehicle Traffic Control Signal Heads – Light Emitting Diode (LED) Circular Signal Supplement
   - Vehicle Traffic Control Signal Heads – Light Emitting Diode (LED) Vehicle Arrow Traffic Signal Supplement
   - Pedestrian Traffic Control Signal Indications –Light Emitting Diode (LED) Signal Modules.

   (Note: The Department currently recognizes two approved independent testing laboratories. They are Intertek ETL Semko and Light Metrics, Incorporated with Garwood Laboratories. Independent laboratory tests from other laboratories may be considered as part of the QPL submittal at the discretion of the Department,
3. Evidence of conformance with the requirements of these specifications,
4. A manufacturer's warranty statement in accordance with the required warranty, and
5. Submittal of manufacturer's design and production documentation for the model, including but not limited to, electrical schematics, electronic component values, proprietary part numbers, bill of materials, and production electrical and photometric test parameters.
6. Evidence of approval of the product to bear the Intertek ETL Verified product label for LED traffic signal modules.

Docusign Envelope ID: DB3D6260-3BD0-8DC6-815C-0C49C463F240

Ensure LED traffic signal modules meet the performance requirements for the minimum period of 15 years, provide a written warranty against defects in materials and workmanship for the modules for a period of 15 years after installation of the modules. During the warranty period, the manufacturer must provide new replacement modules within 45 days of receipt of modules that have failed at no cost to the State. Repaired or refurbished modules may not be used to fulfill the manufacturer's warranty obligations. Provide manufacturer's warranty documentation to the Department during evaluation of product for inclusion on Qualified Products List (QPL).

B. Vehicle Signal Heads

Comply with the ITE standard "Vehicle Traffic Control Signal Heads". Provide housings with provisions for attaching backplates.

Provide visors that are 10 inches in length for 12-inch vehicle signal heads.

Provide a termination block with one empty terminal for field wiring for each indication plus one empty terminal for the neutral conductor. Have all signal sections wired to the termination block. Provide barriers between the terminals that have terminal screws with a minimum Number 8 thread size and that will accommodate and secure spade lugs sized for a Number 10 terminal screw.

Mount termination blocks in the yellow signal head sections on all in-line vehicle signal heads.

Furnish vehicle signal head interconnecting brackets. Provide one-piece aluminum brackets less than 4.5 inches in height and with no threaded pipe connections. Provide hand holes on the bottom of the brackets to aid in installing wires to the signal heads. Lower brackets that carry no wires and are used only for connecting the bottom signal sections together may be flat in construction.

For messenger cable mounting, provide messenger cable hangers, wire outlet bodies, balance adjusters, bottom caps, wire entrance fitting brackets, and all other hardware necessary to make complete, watertight connections of the vehicle signal heads to the messenger cable. Fabricate messenger cable hanger components, wire outlet bodies and balance adjuster components from stainless steel or malleable iron galvanized in accordance with ASTM A153 (Class A) or ASTM A123. Provide serrated rings made of aluminum. Provide messenger cable hangers with U-bolt clamps. Fabricate washers, screws, hex-head bolts and associated nuts, clevis pins, cotter pins, U-bolt clamps and nuts from stainless steel.

Provide LED vehicular traffic signal modules (hereafter referred to as modules) that consist of an assembly that uses LEDs as the light source in lieu of an incandescent lamp for use in traffic signal sections. Use LEDs that are aluminum indium gallium phosphorus (AlInGaP) technology for red and yellow indications and indium gallium nitride (InGaN) for green indications. Install the ultra bright type LEDs that are rated for 100,000 hours of continuous operation from -40°F to +165°F. Design modules to have a minimum useful life of 15 years and to meet all parameters of this specification during this period of useful life.

For the modules, provide spade terminals crimped to the lead wires and sized for a #10 screw connection to the existing terminal block in a standard signal head. Do not provide other types of crimped terminals with a spade adapter.

Ensure the power supply is integral to the module assembly. On the back of the module, permanently mark the date of manufacture (month & year) or some other method of identifying date of manufacture.

Tint the red, yellow and green lenses to correspond with the wavelength (chromaticity) of the LED. Transparent tinting films are unacceptable. Provide a lens that is integral to the unit with a smooth outer surface.

Docusign Envelope ID: DB3D6260-3BD0-8DC6-815C-0C49C463F240

1. LED Circular Signal Modules

Provide modules in 12-inch circular sections configurations. All makes and models of LED modules purchased for use on the State Highway System shall appear on the current NCDOT Traffic Signal Qualified Products List (QPL).

Provide the manufacturer's model number and the product number (assigned by the Department) for each module that appears on the 2024 or most recent Qualified Products List. In addition, provide manufacturer's certification in accordance with Article 106-3 of the *Standard Specifications,* that each module meets or exceeds the ITE "Vehicle Traffic Control Signal Heads – Light Emitting Diode (LED) Circular Signal Supplement" dated June 27, 2005 (hereafter referred to as VTCSH Circular Supplement) and other requirements stated in this specification.

Provide modules that meet the following requirements when tested under the procedures outlined in the VTCSH Circular Supplement:

Module Type	Max. Wattage at 165° F	Nominal Wattage at 77° F
12-inch red circular	17	11
12-inch green circular	15	15

For yellow circular signal modules, provide modules tested under the procedures outlined in the VTCSH Circular Supplement to ensure power required at 77° F is 22 Watts or less for the 12-inch circular module.

Note: Use a wattmeter having an accuracy of ±1% to measure the nominal wattage and maximum wattage of a circular traffic signal module. Power may also be derived from voltage, current and power factor measurements.

2. LED Arrow Signal Modules

Provide 12-inch omnidirectional arrow signal modules. All makes and models of LED modules purchased for use on the State Highway System shall appear on the current NCDOT Traffic Signal Qualified Products List (QPL).

Provide the manufacturer's model number and the product number (assigned by the Department) for each module that appears on the 2024 or most recent Qualified Products List. In addition, provide manufacturer's certification in accordance with Article 106-3 of the *Standard Specifications,* that each module meets or exceeds the requirements for 12-inch omnidirectional modules specified in the ITE "Vehicle Traffic Control Signal Heads – Light Emitting Diode (LED) Vehicle Arrow Traffic Signal Supplement" dated July 1, 2007 (hereafter referred to as VTCSH Arrow Supplement) and other requirements stated in this specification.

Provide modules that meet the following requirements when tested under the procedures outlined in the VTCSH Arrow Supplement:

Module Type	Max. Wattage at 165° F	Nominal Wattage at 77° F
12-inch red arrow	12	9
12-inch green arrow	11	11

For yellow arrow signal modules, provide modules tested under the procedures outlined in the VTCSH Arrow Supplement to insure power required at 77° F is 12 Watts or less.

Note: Use a wattmeter having an accuracy of ±1% to measure the nominal wattage and maximum wattage of an arrow traffic signal module. Power may also be derived from voltage, current and power factor measurements.

Docusign Envelope ID: DB3D6260-3BD0-8DC6-815C-0C49C463F240

C. Pedestrian Signal Heads

Provide pedestrian signal heads with international symbols that meet the MUTCD. Do not provide letter indications.

Comply with the ITE standard for "Pedestrian Traffic Control Signal Indications" and the following sections of the ITE standard for "Vehicle Traffic Control Signal Heads" in effect on the date of advertisement:

- Section 3.00 - "Physical and Mechanical Requirements"
- Section 4.01 - "Housing, Door, and Visor: General"
- Section 4.04 - "Housing, Door, and Visor: Materials and Fabrication"
- Section 7.00 - "Exterior Finish"

Provide a double-row termination block with three empty terminals and number 10 screws for field wiring. Provide barriers between the terminals that accommodate a spade lug sized for number 10 terminal screws. Mount the termination block in the hand section. Wire all signal sections to the terminal block.

Where required by the plans, provide 16-inch pedestrian signal heads with traditional three-sided, rectangular visors, 6 inches long.

Provide 2-inch diameter pedestrian push-buttons with weather-tight housings fabricated from die-cast aluminum and threading in compliance with the NEC for rigid metal conduit. Provide a weep hole in the housing bottom and ensure that the unit is vandal resistant.

Provide push-button housings that are suitable for mounting on flat or curved surfaces and that will accept 1/2-inch conduit installed in the top. Provide units that have a heavy duty push-button assembly with a sturdy, momentary, normally-open switch. Have contacts that are electrically insulated from the housing and push-button. Ensure that the push-buttons are rated for a minimum of 5 mA at 24 volts DC and 250 mA at 12 volts AC.

Provide standard R10-3 signs with mounting hardware that comply with the MUTCD in effect on the date of advertisement. Provide R10-3E signs for countdown pedestrian heads.

Design the LED pedestrian traffic signal modules (hereafter referred to as modules) for installation into standard pedestrian traffic signal sections that do not contain the incandescent signal section reflector, lens, eggcrate visor, gasket, or socket. Provide modules that consist of an assembly that uses LEDs as the light source in lieu of an incandescent lamp. Use LEDs that are of the latest aluminum indium gallium phosphorus (AlInGaP) technology for the Portland Orange hand and countdown displays. Use LEDs that are of the latest indium gallium nitride (InGaN) technology for the Lunar White walking man displays. Install the ultra-bright type LEDs that are rated for 100,000 hours of continuous operation from -40°F to +165°F. Design modules to have a minimum useful life of 60 months and to meet all parameters of this specification during this period of useful life.

Design all modules to operate using a standard 3 - wire field installation. Provide spade terminals crimped to the lead wires and sized for a #10 screw connection to the existing terminal block in a standard pedestrian signal housing. Do not provide other types of crimped terminals with a spade adapter.

Ensure the power supply is integral to the module assembly. On the back of the module, permanently mark the date of manufacture (month & year) or some other method of identifying date of manufacture.

Docusign Envelope ID: DB3D6260-3BD0-8DC6-815C-0C49C463F240

Provide modules in 16-inch displays which have the solid hand/walking man overlay on the left and the countdown on the right configuration. All makes and models of LED modules purchased for use on the State Highway System shall appear on the current NCDOT Traffic Signal Qualified Products List (QPL).

Provide the manufacturer's model number and the product number (assigned by the Department) for each module that appears on the 2024 or most recent Qualified Products List. In addition, provide manufacturer's certification in accordance with Article 106-3 of the *Standard Specifications,* that each module meets or exceeds the ITE "Pedestrian Traffic Control Signal Indicators - Light Emitting Diode (LED) Signal Modules" dated August 04, 2010 (hereafter referred to as PTCSI Pedestrian Standard) and other requirements stated in this specification.

Provide modules that meet the following requirements when tested under the procedures outlined in the PTCSI Pedestrian Standard:

Module Type	Max. Wattage at 165° F	Nominal Wattage at 77° F
Hand Indication	16	13
Walking Man Indication	12	9
Countdown Indication	16	13

Note: Use a wattmeter having an accuracy of ±1% to measure the nominal wattage and maximum wattage of a circular traffic signal module. Power may also be derived from voltage, current and power factor measurements.

Provide module lens that is hard coated or otherwise made to comply with the material exposure and weathering effects requirements of the Society of Automotive Engineers (SAE) J576. Ensure all exposed components of the module are suitable for prolonged exposure to the environment, without appreciable degradation that would interfere with function or appearance.

Ensure the countdown display continuously monitors the traffic controller to automatically learn the pedestrian phase time and update for subsequent changes to the pedestrian phase time.

Ensure the countdown display begins normal operation upon the completion of the preemption sequence and no more than one pedestrian clearance cycle.

3. CONTROLLERS WITH CABINETS

3.1 MATERIALS – TYPE 2070LX CONTROLLERS

Furnish model 2070LX controller units that conform to CALTRANS *Transportation Electrical Equipment Specifications* (TEES) (dated March 12, 2009, plus Errata 1 dated January 21, 2010 and Errata 2 dated December 5, 2014) except as required herein.

The Department will provide software at the beginning of the burning-in period. Contractor shall give 5 working days notice before needing software. Program software provided by the Department.

Provide model 2070LX controllers with Linux kernel 2.6.18 or higher and device drivers, composed of the unit chassis and at a minimum the following modules and assemblies:

- MODEL 2070-1C, CPU Module, Single Board, with 8Mb Datakey (blue in color)
- MODEL 2070-2E+, Field I/O Module (FI/O)
  - Note: Configure the Field I/O Module to disable both the External WDT Shunt/Toggle Switch and SP3 (SP3 active indicator is "off")

Docusign Envelope ID: DB3D6260-3BD0-8DC6-815C-0C49C463F240

- MODEL 2070-3B, Front Panel Module (FP), Display B (8x40)
- MODEL 2070-4A, Power Supply Module, 10 AMP

The 2070-1C module's CPU shall be capable of executing all single and double precision floating point instructions directly within the CPU hardware.

Provide all board support package (BSP), toolchain, libraries, and documentation to the state and to any specified applications software manufacturer when requested by the state to facilitate the porting, building, testing, and support the Department's application software.

3.2 MATERIALS – GENERAL CABINETS

Provide a moisture resistant coating on all circuit boards.

Provide one 20 mm diameter radial lead UL-recognized metal oxide varistor (MOV) between each load switch field terminal and equipment ground. Electrical performance is outlined below.

PROPERTIES OF MOV SURGE PROTECTOR	
Maximum Continuous Applied Voltage at 185° F	150 VAC (RMS) 200 VDC
Maximum Peak 8x20µs Current at 185° F	6500 A
Maximum Energy Rating at 185° F	80 J
Voltage Range 1 mA DC Test at 77° F	212-268 V
Max. Clamping Voltage 8x20µs, 100A at 77° F	395 V
Typical Capacitance (1 MHz) at 77° F	1600 pF

Provide a power line surge protector that is a two-stage device that will allow connection of the radio frequency interference filter between the stages of the device. Ensure that a maximum continuous current is at least 10A at 120V. Ensure that the device can withstand a minimum of 20 peak surge current occurrences at 20,000A for an 8x20 microsecond waveform. Provide a maximum clamp voltage of 395V at 20,000A with a nominal series inductance of 200µh. Ensure that the voltage does not exceed 395V. Provide devices that comply with the following:

Docusign Envelope ID: DB3D6260-3BD0-8DC6-815C-0C49C463F240

Frequency (Hz)	Minimum Insertion Loss (dB)
60	0
10,000	30
50,000	55
100,000	50
500,000	50
2,000,000	60
5,000,000	40
10,000,000	20
20,000,000	25

3.3 MATERIALS – TYPE 170E CABINETS

A. Type 170 E Cabinets General

Conform to the city of Los Angeles' Specification No. 54-053-08, *Traffic Signal Cabinet Assembly Specification* (dated July 2008), except as required herein.

Furnish model 332 base mounted cabinets with auxiliary output files installed and configured for 8 vehicle phases, 4 pedestrian phases, and 6 overlaps. Do not reassign load switches to accommodate overlaps unless shown on electrical details.

Provide model 200 load switches, model 222 loop detector sensors, model 252 AC isolators, and model 242 DC isolators according to the electrical details. As a minimum, provide one (1) model 2018 conflict monitor, one (1) model 206L power supply unit, two (2) model 204 flashers, one (1) DC isolator (located in slot I14), and four (4) model 430 flash transfer relays (provide seven (7) model 430 flash transfer relays if auxiliary output file is installed) with each cabinet.

B. Type 170 E Cabinet Electrical Requirements

Provide a cabinet assembly designed to ensure that upon leaving any cabinet switch or conflict monitor initiated flashing operation, the controller starts up in the programmed start up phases and start up interval.

Furnish two sets of non-fading cabinet wiring diagrams and schematics in a paper envelope or container and placed in the cabinet drawer.

All AC+ power is subject to radio frequency signal suppression.

Provide surge suppression in the cabinet for each type of cabinet device. Provide surge protection for the full capacity of the cabinet input file. Provide surge suppression devices that operate properly over a temperature range of -40º F to +185º F. Ensure the surge suppression devices provide both common and differential modes of protection.

Provide a pluggable power line surge protector that is installed on the back of the PDA (power distribution assembly) chassis to filter and absorb power line noise and switching transients. Ensure the device incorporates LEDs for failure indication and provides a dry relay contact closure for the purpose of remote sensing. Ensure the device meets the following specifications:

Peak Surge Current (Single pulse, 8x20µs)……..20,000A

Docusign Envelope ID: DB3D6260-3BD0-8DC6-815C-0C49C463F240

Occurrences (8x20µs waveform)……..10 minimum @ 20,000A
Maximum Clamp Voltage…….395VAC
Operating Current……..15 amps
Response Time……..< 5 nanoseconds

Provide a loop surge suppressor for each set of loop terminals in the cabinet. Ensure the device meets the following specifications:

Peak Surge Current (6 times, 8x20µs)
(Differential Mode)…….400A
(Common Mode)……1,000A
Occurrences (8x20µs waveform)……..500 min @ 200A
Maximum Clamp Voltage
(Differential Mode @400A)……35V
(Common Mode @1,000A)…….35V
Response Time……..< 5 nanoseconds
Maximum Capacitance……..35 pF

Provide a data communications surge suppressor for each communications line entering or leaving the cabinet. Ensure the device meets the following specifications:

Peak Surge Current (Single pulse, 8x20µs)……..10,000A
Occurrences (8x20µs waveform)……..100 min @ 2,000A
Maximum Clamp Voltage…….Rated for equipment protected
Response Time……..< 1 nanosecond
Maximum Capacitance…….1,500 pF
Maximum Series Resistance…….15Ω

Provide a DC signal surge suppressor for each DC input channel in the cabinet. Ensure the device meets the following specifications:

Peak Surge Current (Single pulse, 8x20µs)……..10,000A
Occurrences (8x20µs waveform)……..100 @ 2,000A
Maximum Clamp Voltage…….30V
Response Time……..< 1 nanosecond

Provide a 120 VAC signal surge suppressor for each AC+ interconnect signal input. Ensure the device meets the following specifications:

Docusign Envelope ID: DB3D6260-3BD0-8DC6-815C-0C49C463F240

Peak Surge Current (Single pulse, 8x20µs)……..20,000A
Maximum Clamp Voltage……350VAC
Response Time……..< 200 nanoseconds
Discharge Voltage……<200 Volts @ 1,000A
Insulation Resistance……≥100 MΩ

Provide conductors for surge protection wiring that are of sufficient size (ampacity) to withstand maximum overcurrents which could occur before protective device thresholds are attained and current flow is interrupted.

If additional surge protected power outlets are needed to accommodate fiber transceivers, modems, etc., install a UL listed, industrial, heavy-duty type power outlet strip with a minimum rating of 15 A / 125 VAC, 60 Hz. Provide a strip that has a minimum of 3 grounded outlets. Ensure the power outlet strip plugs into one of the controller unit receptacles located on the rear of the PDA. Ensure power outlet strip is mounted securely; provide strain relief if necessary.

Provide a door switch in the front and a door switch in the rear of the cabinet that will provide the controller unit with a Door Ajar alarm when either the front or the rear door is open. Ensure the door switches apply DC ground to the Input File when either the front door or the rear door is open.

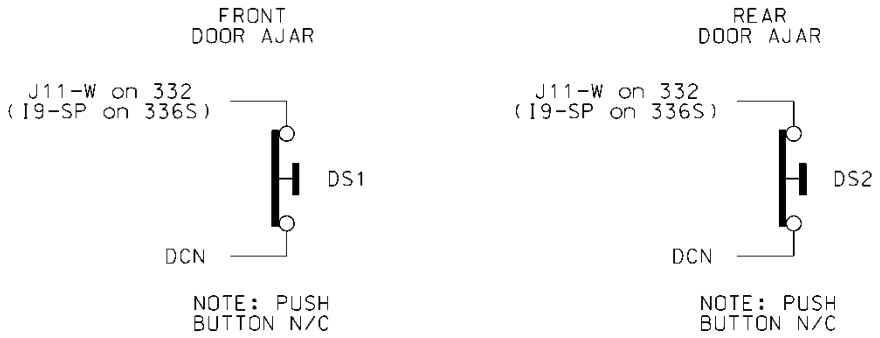

Furnish a fluorescent fixture in the rear across the top of the cabinet and another fluorescent fixture in the front across the top of the cabinet at a minimum. Ensure that the fixtures provide sufficient light to illuminate all terminals, labels, switches, and devices in the cabinet. Conveniently locate the fixtures so as not to interfere with a technician's ability to perform work on any devices or terminals in the cabinet. Provide a protective diffuser to cover exposed bulbs. Install 16 watt T-4 lamps in the fluorescent fixtures. Provide a door switch to provide power to each fixture when the respective door is open. Wire the fluorescent fixtures to the 15 amp ECB (equipment circuit breaker).

Docusign Envelope ID: DB3D6260-3BD0-8DC6-815C-0C49C463F240

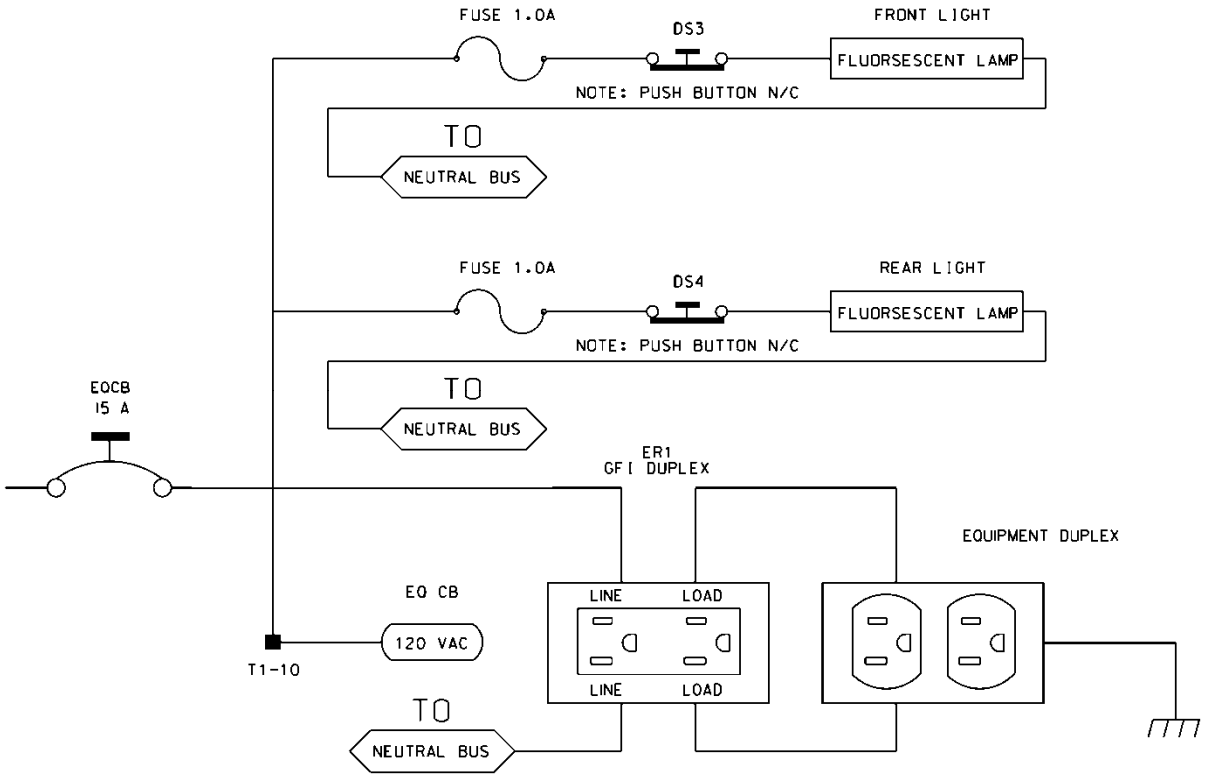

Furnish a police panel with a police panel door. Ensure that the police panel door permits access to the police panel when the main door is closed. Ensure that no rainwater can enter the cabinet even with the police panel door open. Provide a police panel door hinged on the right side as viewed from the front. Provide a police panel door lock that is keyed to a standard police/fire call box key. In addition to the requirements of LA Specification No. 54-053-08, provide the police panel with a toggle switch connected to switch the intersection operation between normal stop-and-go operation (AUTO) and manual operation (MANUAL). Ensure that manual control can be implemented using inputs and software such that the controller provides full programmed clearance times for the yellow clearance and red clearance for each phase while under manual control.

Provide a 1/4-inch locking phone jack in the police panel for a hand control to manually control the intersection. Provide sufficient room in the police panel for storage of a hand control and cord.

For model 332 base mounted cabinets, ensure terminals J14-E and J14-K are wired together on the rear of the Input File. Connect TB9-12 (J14 Common) on the Input Panel to T1-2 (AC-) on the rear of the PDA.

Provide detector test switches mounted at the top of the cabinet rack or other convenient location which may be used to place a call on each of eight phases based on the chart below. Provide three positions for each switch: On (place call), Off (normal detector operation), and Momentary On (place momentary call and return to normal detector operation after switch is released). Ensure that the switches are located such that the technician can read the controller display and observe the intersection.

Connect detector test switches for cabinets as follows:

Docusign Envelope ID: DB3D6260-3BD0-8DC6-815C-0C49C463F240

332 Cabinet	
Detector Call Switches	**Terminals**
Phase 1	I1-W
Phase 2	I4-W
Phase 3	I5-W
Phase 4	I8-W
Phase 5	J1-W
Phase 6	J4-W
Phase 7	J5-W
Phase 8	J8-W

Provide the PCB 28/56 connector for the conflict monitor unit (CMU) with 28 independent contacts per side, dual-sided with 0.156 inch contact centers. Provide the PCB 28/56 connector contacts with solder eyelet terminations. Ensure all connections to the PCB 28/56 connector are soldered to the solder eyelet terminations.

Ensure that all cabinets have the CMU connector wired according to the 332 cabinet connector pin assignments (include all wires for auxiliary output file connection). Wire pins 13, 16, R, and U of the CMU connector to a separate 4 pin plug, P1, as shown below. Provide a second plug, P2, which will mate with P1 and is wired to the auxiliary output file as shown below. Provide an additional plug, P3, which will mate with P1 and is wired to the pedestrian yellow circuits as shown below. When no auxiliary output file is installed in the cabinet, provide wires for the green and yellow inputs for channels 11, 12, 17, and 18, the red inputs for channels 17 and 18, and the wires for the P2 plug. Terminate the two-foot wires with ring type lugs, insulated, and bundled for optional use.

	P1		P2		P3	
PIN	**FUNCTION**	**CONN TO**	**FUNCTION**	**CONN TO**	**FUNCTION**	**CONN TO**
1	CH-9G	CMU-13	OLA-GRN	A123	2P-YEL	114
2	CH-9Y	CMU-16	OLA-YEL	A122	4P-YEL	105
3	CH-10G	CMU-R	OLB-GRN	A126	6P-YEL	120
4	CH-10Y	CMU-U	OLB-YEL	A125	8P-YEL	111

Do not provide the P20 terminal assembly (red monitor board) or red interface ribbon cable as specified in LA Specification No. 54-053-08.

Provide a P20 connector that mates with and is compatible with the red interface connector mounted on the front of the conflict monitor. Ensure that the P20 connector and the red interface connector on the conflict monitor are center polarized to ensure proper connection. Ensure that removal of the P20 connector will cause the conflict monitor to recognize a latching fault condition and place the cabinet into flashing operation.

Docusign Envelope ID: DB3D6260-3BD0-8DC6-815C-0C49C463F240

Wire the P20 connector to the output file and auxiliary output file using 22 AWG stranded wires. Ensure the length of these wires is a minimum of 42 inches in length. Provide a durable braided sleeve around the wires to organize and protect the wires.

Wire the P20 connector to the traffic signal red displays to provide inputs to the conflict monitor as shown below. Ensure the pedestrian Don't Walk circuits are wired to channels 13 through 16 of the P20 connector. When no auxiliary output file is installed in the cabinet, provide wires for channels 9 through 12 reds. Provide a wire for special function 1. Terminate the unused wires with ring type lugs, insulated, and bundled for optional use.

	P20 Connector				
PIN	**FUNCTION**	**CONN TO**	**PIN**	**FUNCTION**	**CONN TO**
1	Channel 15 Red	119	2	Channel 16 Red	110
3	Channel 14 Red	104	4	Chassis GND	01-9
5	Channel 13 Red	113	6	N/C	
7	Channel 12 Red	AUX 101	8	Spec Function 1	
9	Channel 10 Red	AUX 124	10	Channel 11 Red	AUX 114
11	Channel 9 Red	AUX 121	12	Channel 8 Red	107
13	Channel 7 Red	122	14	Channel 6 Red	134
15	Channel 5 Red	131	16	Channel 4 Red	101
17	Channel 3 Red	116	18	Channel 2 Red	128
19	Channel 1 Red	125	20	Red Enable	01-14

Ensure the controller unit outputs to the auxiliary output file are pre-wired to the C5 connector. When no auxiliary output file is installed in the cabinet, connect the C5 connector to a storage socket located on the Input Panel or on the rear of the PDA.

Do not wire pin 12 of the load switch sockets.

In addition to the requirements of LA Specification No. 54-053-08, ensure relay K1 on the Power Distribution Assembly (PDA) is a four pole relay and K2 on the PDA is a two pole relay.

Provide a two pole, ganged circuit breaker for the flash bus circuit. Ensure the flash bus circuit breaker is an inverse time circuit breaker rated for 10 amps at 120 VAC with a minimum of 10,000 RMS symmetrical amperes short circuit current rating. Do not provide the auxiliary switch feature on the flash bus circuit breaker. Ensure the ganged flash bus circuit breaker is certified by the circuit breaker manufacturer to provide gang tripping operation.

Docusign Envelope ID: DB3D6260-3BD0-8DC6-815C-0C49C463F240

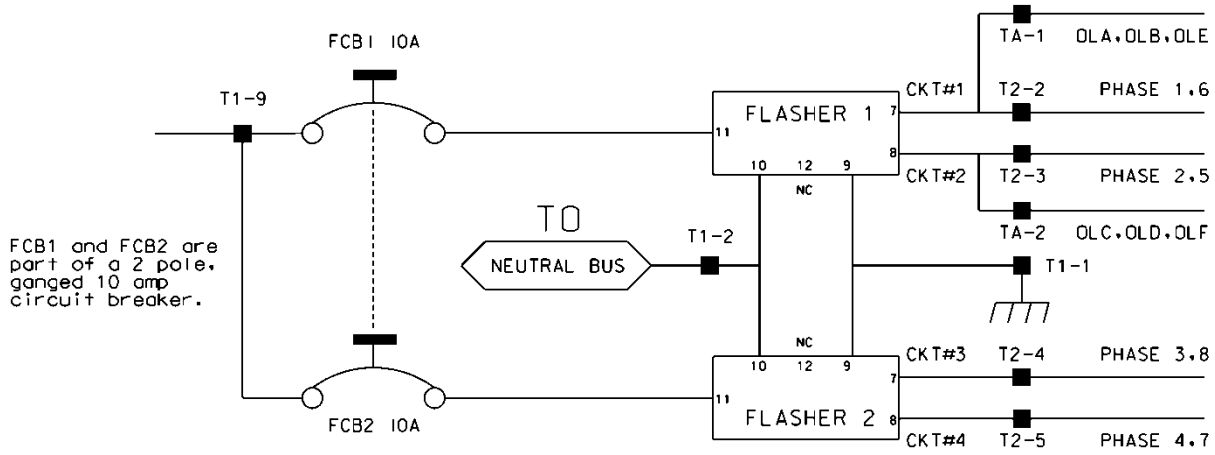

Ensure auxiliary output files are wired as follows:

AUXILIARY OUTPUT FILE TERMINAL BLOCK TA ASSIGNMENTS	
POSITION	**FUNCTION**
1	Flasher Unit #1, Circuit 1/FTR1 (OLA, OLB)/FTR3 (OLE)
2	Flasher Unit #1, Circuit 2/FTR2 (OLC, OLD)/FTR3 (OLF)
3	Flash Transfer Relay Coils
4	AC -
5	Power Circuit 5
6	Power Circuit 5
7	Equipment Ground Bus
8	NC

Provide four spare load resistors mounted in each cabinet. Ensure each load resistor is rated as shown in the table below. Wire one side of each load resistor to AC-. Connect the other side of each resistor to a separate terminal on a four (4) position terminal block. Mount the load resistors and terminal block either inside the back of Output File No. 1 or on the upper area of the Service Panel.

ACCEPTABLE LOAD RESISTOR VALUES	
VALUE (ohms)	**WATTAGE**
1.5K – 1.9 K	25W (min)
2.0K – 3.0K	10W (min)

Docusign Envelope ID: DB3D6260-3BD0-8DC6-815C-0C49C463F240

Provide Model 200 load switches, Model 204 flashers, Model 242 DC isolators, Model 252 AC isolators, and Model 206L power supply units that conform to CALTRANS' "*Transportation Electrical Equipment Specifications*" dated March 12, 2009 with Erratum 1.

C. Type 170 E Cabinet Physical Requirements:

Do not mold, cast, or scribe the name "City of Los Angeles" on the outside of the cabinet door as specified in LA Specification No. 54-053-08. Do not provide a Communications Terminal Panel as specified in LA Specification No. 54-053-08. Do not provide terminal block TBB on the Service Panel. Do not provide Cabinet Verification Test Program software or associated test jigs as specified in LA Specification No. 54-053-08.

Furnish unpainted, natural, aluminum cabinet shells. Ensure that all non-aluminum hardware on the cabinet is stainless steel or a Department approved non-corrosive alternate.

Ensure the lifting eyes, gasket channels, police panel, and all supports welded to the enclosure and doors are fabricated from 0.125 inch minimum thickness aluminum sheet and meet the same standards as the cabinet and doors.

Provide front and rear doors with latching handles that allow padlocking in the closed position. Furnish 0.75 inch minimum diameter stainless steel handles with a minimum 0.5 inch shank. Place the padlocking attachment at 4.0 inches from the handle shank center to clear the lock and key. Provide an additional 4.0 inches minimum gripping length.

Provide Corbin #2 locks on the front and rear doors. Provide one (1) Corbin #2 and one (1) police master key with each cabinet. Ensure main door locks allow removal of keys in the locked position only.

Provide a surge protection panel with 16 loop surge protection devices and designed to allow sufficient free space for wire connection/disconnection and surge protection device replacement. For model 332 cabinets, provide an additional 20 loop surge protection devices. Provide an additional two AC+ interconnect surge devices to protect one slot and eight DC surge protection devices to protect four slots. Provide no protection devices on slot I14.

For base mounted cabinets, mount surge protection panels on the left side of the cabinet as viewed from the rear. Attach each panel to the cabinet rack assembly using bolts and make it easily removable. Mount the surge protection devices in vertical rows on each panel and connect the devices to one side of 12 position, double row terminal blocks with #8 screws. For each surge protection panel, terminate all grounds from the surge protection devices on a copper equipment ground bus attached to the surge protection panel. Wire the terminals to the rear of a standard input file using spade lugs for input file protection.

Provide permanent labels that indicate the slot and the pins connected to each terminal that may be viewed from the rear cabinet door. Label and orient terminals so that each pair of inputs is next to each other. Indicate on the labeling the input file (I or J), the slot number (1-14) and the terminal pins of the input slots (either D & E for upper or J & K for lower).

Provide a minimum 14 x 16 inch pull out, hinged top shelf located immediately below controller mounting section of the cabinet. Ensure the shelf is designed to fully expose the table surface outside the controller at a height approximately even with the bottom of the controller. Ensure the shelf has a storage bin interior which is a minimum of 1 inch deep and approximately the same dimensions as the shelf. Provide an access to the storage area by lifting the hinged top of the shelf. Fabricate the shelf and slide from aluminum or stainless steel and ensure the assembly can support the 2070 controller plus 15 pounds of additional weight. Ensure shelf has a locking mechanism to secure it in the fully extended position and does not inhibit the removal of the 2070 controller or removal of

Docusign Envelope ID: DB3D6260-3BD0-8DC6-815C-0C49C463F240

cards inside the controller when fully extended. Provide a locking mechanism that is easily released when the shelf is to be returned to its non-use position directly under the controller.

D. Model 2018 Enhanced Conflict Monitor

Furnish Model 2018 Enhanced Conflict Monitors that provide monitoring of 18 channels. Ensure each channel consists of a green, yellow, and red field signal input. Ensure that the conflict monitor meets or exceeds CALTRANS' Transportation Electrical Equipment Specifications dated March 12, 2009, with Erratum 1 (hereafter referred to as CALTRANS' 2009 TEES) for a model 210 monitor unit and other requirements stated in this specification.

Ensure the conflict monitor is provided with an 18 channel conflict programming card. Pin EE and Pin T of the conflict programming card shall be connected together. Pin 16 of the conflict programming card shall be floating. Ensure that the absence of the conflict programming card will cause the conflict monitor to trigger (enter into fault mode), and remain in the triggered state until the programming card is properly inserted and the conflict monitor is reset.

Provide a conflict monitor that incorporates LED indicators into the front panel to dynamically display the status of the monitor under normal conditions and to provide a comprehensive review of field inputs with monitor status under fault conditions. Ensure that the monitor indicates the channels that were active during a conflict condition and the channels that experienced a failure for all other per channel fault conditions detected. Ensure that these indications and the status of each channel are retained until the Conflict Monitor is reset. Furnish LED indicators for the following:

- AC Power (Green LED indicator)
- VDC Failed (Red LED indicator)
- WDT Error (Red LED indicator)
- Conflict (Red LED indicator)
- Red Fail (Red LED indicator)
- Dual Indication (Red LED indicator)
- Yellow/Clearance Failure (Red LED indicator)
- PCA/PC Ajar (Red LED indicator)
- Monitor Fail/Diagnostic Failure (Red LED indicator)
- 54 Channel Status Indicators (1 Red, 1 Yellow, and 1 Green LED indicator for each of the 18 channels)

Provide a switch to set the Red Fail fault timing. Ensure that when the switch is in the ON position the Red Fail fault timing value is set to 1350 +/- 150 ms (2018 mode). Ensure that when the switch is in the OFF position the Red Fail fault timing value is set to 850 +/- 150 ms (210 mode).

Provide a switch to set the Watchdog fault timing. Ensure that when the switch is in the ON position the Watchdog fault timing value is set to 1.0 +/- 0.1 s (2018 mode). Ensure that when the switch is in the OFF position the Watchdog fault timing value is set to 1.5 +/- 0.1 s (210 mode).

Provide a jumper or switch to set the AC line brown-out levels. Ensure that when the jumper is present or the switch is in the ON position the AC line dropout voltage threshold is 98 +/- 2 Vrms, the AC line restore voltage threshold is 103 +/- 2 Vrms, and the AC line brown-out timing value is set to 400 +/- 50ms (2018 mode). Ensure that when the jumper is not present or the switch is in the OFF position the AC line dropout voltage threshold is 92 +/- 2 Vrms, the AC line restore voltage

Docusign Envelope ID: DB3D6260-3BD0-8DC6-815C-0C49C463F240

threshold is 98 +/- 2 Vrms, and the AC line brown-out timing value is set to 80 +/- 17 ms (210 mode).

Provide a jumper or switch that will enable and disable the Watchdog Latch function. Ensure that when the jumper is not present or the switch is in the OFF position the Watchdog Latch function is disabled. In this mode of operation, a Watchdog fault will be reset following a power loss, brownout, or power interruption. Ensure that when the jumper is present or the switch is in the ON position the Watchdog Latch function is enabled. In this mode of operation, a Watchdog fault will be retained until a Reset command is issued.

Provide a jumper that will reverse the active polarity for pin #EE (output relay common). Ensure that when the jumper is not present pin #EE (output relay common) will be considered 'Active' at a voltage greater than 70 Vrms and 'Not Active' at a voltage less than 50 Vrms (Caltrans mode). Ensure that when the jumper is present pin #EE (output relay common) will be considered 'Active' at a voltage less than 50 Vrms and 'Not Active' at a voltage greater than 70 Vrms (Failsafe mode).

In addition to the connectors required by CALTRANS' 2009 TEES, provide the conflict monitor with a red interface connector mounted on the front of the monitor. Ensure the connector is a 20 pin, right angle, center polarized, male connector with latching clip locks and polarizing keys. Ensure the right angle solder tails are designed for a 0.062" thick printed circuit board. Keying of the connector shall be between pins 3 and 5, and between 17 and 19. Ensure the connector has two rows of pins with the odd numbered pins on one row and the even pins on the other row. Ensure the connector pin row spacing is 0.10" and pitch is 0.10". Ensure the mating length of the connector pins is 0.24". Ensure the pins are finished with gold plating 30µ" thick.

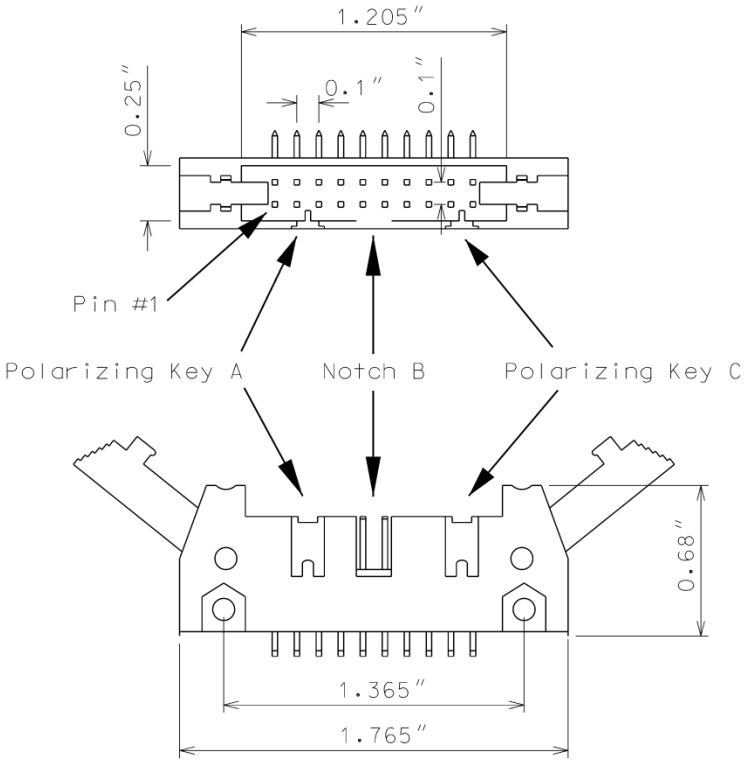

Docusign Envelope ID: DB3D6260-3BD0-8DC6-815C-0C49C463F240

Ensure the red interface connector pins on the monitor have the following functions:

Pin #	Function	Pin #	Function
1	Channel 15 Red	2	Channel 16 Red
3	Channel 14 Red	4	Chassis Ground
5	Channel 13 Red	6	Special Function 2
7	Channel 12 Red	8	Special Function 1
9	Channel 10 Red	10	Channel 11 Red
11	Channel 9 Red	12	Channel 8 Red
13	Channel 7 Red	14	Channel 6 Red
15	Channel 5 Red	16	Channel 4 Red
17	Channel 3 Red	18	Channel 2 Red
19	Channel 1 Red	20	Red Enable

Ensure that removal of the P20 cable connector will cause the conflict monitor to recognize a latching fault condition and place the cabinet into flashing operation.

Provide Special Function 1 and Special Function 2 inputs to the unit which shall disable only Red Fail Monitoring when either input is sensed active. A Special Function input shall be sensed active when the input voltage exceeds 70 Vrms with a minimum duration of 550 ms. A Special Function input shall be sensed not active when the input voltage is less than 50 Vrms or the duration is less than 250 ms. A Special Function input is undefined by these specifications and may or may not be sensed active when the input voltage is between 50 Vrms and 70 Vrms or the duration is between 250 ms and 550 ms.

Ensure the conflict monitor recognizes field signal inputs for each channel that meet the following requirements:

- consider a Red input greater than 70 Vrms and with a duration of at least 500 ms as an “on” condition;
- consider a Red input less than 50 Vrms or with a duration of less than 200 ms as an “off” condition (no valid signal);
- consider a Red input between 50 Vrms and 70 Vrms or with a duration between 200 ms and 500 ms to be undefined by these specifications;
- consider a Green or Yellow input greater than 25 Vrms and with a duration of at least 500 ms as an “on” condition;
- consider a Green or Yellow input less than 15 Vrms or with a duration of less than 200 ms as an “off” condition; and
- consider a Green or Yellow input between 15 Vrms and 25 Vrms or with a duration between 200 ms and 500 ms to be undefined by these specifications.

Provide a conflict monitor that recognizes the faults specified by CALTRANS’ 2009 TEES and the following additional faults. Ensure the conflict monitor will trigger upon detection of a fault and

Docusign Envelope ID: DB3D6260-3BD0-8DC6-815C-0C49C463F240

will remain in the triggered (in fault mode) state until the unit is reset at the front panel or through the external remote reset input for the following failures:

1. **Red Monitoring or Absence of Any Indication (Red Failure):** A condition in which no "on" voltage signal is detected on any of the green, yellow, or red inputs to a given monitor channel. If a signal is not detected on at least one input (R, Y, or G) of a conflict monitor channel for a period greater than 1000 ms when used with a 170 controller and 1500 ms when used with a 2070 controller, ensure monitor will trigger and put the intersection into flash. If the absence of any indication condition lasts less than 700 ms when used with a 170 controller and 1200 ms when used with a 2070 controller, ensure conflict monitor will not trigger. Red fail monitoring shall be enabled on a per channel basis by the use of switches located on the conflict monitor. Have red monitoring occur when all of the following input conditions are in effect:

   a) Red Enable input to monitor is active (Red Enable voltages are "on" at greater than 70 Vrms, off at less than 50 Vrms, undefined between 50 and 70 Vrms), and

   b) Neither Special Function 1 nor Special Function 2 inputs are active.

   c) Pin #EE (output relay common) is not active

2. **Short/Missing Yellow Indication Fault (Clearance Error):** Yellow indication following a green is missing or shorter than 2.7 seconds (with ± 0.1-second accuracy). If a channel fails to detect an "on" signal at the Yellow input for a minimum of 2.7 seconds (± 0.1 second) following the detection of an "on" signal at a Green input for that channel, ensure that the monitor triggers and generates a clearance/short yellow error fault indication. Short/missing yellow (clearance) monitoring shall be enabled on a per channel basis by the use of switches located on the conflict monitor. This fault shall not occur when the channel is programmed for Yellow Inhibit, when the Red Enable signal is inactive or pin #EE (output relay common) is active.

3. **Dual Indications on the Same Channel:** In this condition, more than one indication (R,Y,G) is detected as "on" at the same time on the same channel. If dual indications are detected for a period greater than 500 ms, ensure that the conflict monitor triggers and displays the proper failure indication (Dual Ind fault). If this condition is detected for less than 200 ms, ensure that the monitor does not trigger. G-Y-R dual indication monitoring shall be enabled on a per channel basis by the use of switches located on the conflict monitor. G-Y dual indication monitoring shall be enabled for all channels by use of a switch located on the conflict monitor. This fault shall not occur when the Red Enable signal is inactive or pin #EE (output relay common) is active.

4. **Configuration Settings Change:** The configuration settings are comprised of (as a minimum) the permissive diode matrix, dual indication switches, yellow disable jumpers, any option switches, any option jumpers, and the Watchdog Enable switch. Ensure the conflict monitor compares the current configuration settings with the previous stored configuration settings on power-up, on reset, and periodically during operation. If any of the configuration settings are changed, ensure that the conflict monitor triggers and causes the program card

Docusign Envelope ID: DB3D6260-3BD0-8DC6-815C-0C49C463F240

indicator to flash. Ensure that configuration change faults are only reset by depressing and holding the front panel reset button for a minimum of three seconds. Ensure the external remote reset input does not reset configuration change faults.

Ensure the conflict monitor will trigger and the AC Power indicator will flash at a rate of 2 Hz ± 20% with a 50% duty cycle when the AC Line voltage falls below the "drop-out" level. Ensure the conflict monitor will resume normal operation when the AC Line voltage returns above the "restore" level. Ensure the AC Power indicator will remain illuminated when the AC voltage returns above the "restore" level. Should an AC Line power interruption occur while the monitor is in the fault mode, then upon restoration of AC Line power, the monitor will remain in the fault mode and the correct fault and channel indicators will be displayed.

Provide a flash interval of at least 6 seconds and at most 16 seconds in duration following a power-up, an AC Line interruption, or a brownout restore. Ensure the conflict monitor will suspend all fault monitoring functions, close the Output relay contacts, and flash the AC indicator at a rate of 4 Hz ± 20% with a 50% duty cycle during this interval. Ensure the termination of the flash interval after at least 6 seconds if the Watchdog input has made 5 transitions between the True and False state and the AC Line voltage is greater than the "restore" level. If the watchdog input has not made 5 transitions between the True and False state within 10 ± 0.5 seconds, the monitor shall enter a WDT error fault condition.

Ensure the conflict monitor will monitor an intersection with a minimum of four approaches using the four-section Flashing Yellow Arrow (FYA) vehicle traffic signal as outlined by the NCHRP 3-54 research project for protected-permissive left turn signal displays. Ensure the conflict monitor will operate in the FYA mode and FYAc (Compact) mode as specified below to monitor each channel pair for the following fault conditions: Conflict, Flash Rate Detection, Red Fail, Dual Indication, and Clearance. Provide a switch to select between the FYA mode and FYAc mode. Provide a switch to select each FYA phase movement for monitoring.

FYA mode

FYA Signal Head	Phase 1	Phase 3	Phase 5	Phase 7
Red Arrow	Channel 9 Red	Channel 10 Red	Channel 11 Red	Channel 12 Red
Yellow Arrow	Channel 9 Yellow	Channel 10 Yellow	Channel 11 Yellow	Channel 12 Yellow
Flashing Yellow Arrow	Channel 9 Green	Channel 10 Green	Channel 11 Green	Channel 12 Green
Green Arrow	Channel 1 Green	Channel 3 Green	Channel 5 Green	Channel 7 Green

FYAc mode

FYA Signal Head	Phase 1	Phase 3	Phase 5	Phase 7

Docusign Envelope ID: DB3D6260-3BD0-8DC6-815C-0C49C463F240

Red Arrow	Channel 1 Red	Channel 3 Red	Channel 5 Red	Channel 7 Red
Yellow Arrow	Channel 1 Yellow	Channel 3 Yellow	Channel 5 Yellow	Channel 7 Yellow
Flashing Yellow Arrow	Channel 1 Green	Channel 3 Green	Channel 5 Green	Channel 7 Green
Green Arrow	Channel 9 Green	Channel 9 Yellow	Channel 10 Green	Channel 10 Yellow

If a FYA channel pair is enabled for FYA operation, the conflict monitor will monitor the FYA logical channel pair for the additional following conditions:

1. **Conflict:** Channel conflicts are detected based on the permissive programming jumpers on the program card. This operation remains unchanged from normal operation except for the solid Yellow arrow (FYA clearance) signal.
2. **Yellow Change Interval Conflict:** During the Yellow change interval of the Permissive Turn channel (flashing Yellow arrow) the conflict monitor shall verify that no conflicting channels to the solid Yellow arrow channel (clearance) are active. These conflicting channels shall be determined by the program card compatibility programming of the Permissive Turn channel (flashing Yellow arrow). During the Yellow change interval of the Protected Turn channel (solid Green arrow) the conflict monitor shall verify that no conflicting channels to the solid Yellow arrow channel (clearance) are active as determined by the program card compatibility programming of the Protected Turn channel (solid Green arrow).
3. **Flash Rate Detection:** The conflict monitor unit shall monitor for the absence of a valid flash rate for the Permissive turn channel (flashing Yellow arrow). If the Permissive turn channel (flashing Yellow arrow) is active for a period greater than 1600 milliseconds, ensure the conflict monitor triggers and puts the intersection into flash. If the Permissive turn channel (flashing Yellow arrow) is active for a period less than 1400 milliseconds, ensure the conflict monitor does not trigger. Ensure the conflict monitor will remain in the triggered (in fault mode) state until the unit is reset at the front panel or through the external remote reset input. Provide a jumper or switch that will enable and disable the Flash Rate Detection function. Ensure that when the jumper is not present or the switch is in the OFF position the Flash Rate Detection function is enabled. Ensure that when the jumper is present or the switch is in the ON position the Flash Rate Detection function is disabled.
4. **Red Monitoring or Absence of Any Indication (Red Failure):** The conflict monitor unit shall detect a red failure if there is an absence of voltage on all four of the inputs of a FYA channel pair (RA, YA, FYA, GA).
5. **Dual Indications on the Same Channel:** The conflict monitor unit shall detect a dual indication if two or more inputs of a FYA channel pair (RA, YA, FYA, GA) are “on” at the same time.
6. **Short/Missing Yellow Indication Fault (Clearance Error):** The conflict monitor unit shall monitor the solid Yellow arrow for a clearance fault when terminating both the Protected Turn channel (solid Green arrow) interval and the Permissive Turn channel (flashing Yellow arrow) interval.

Docusign Envelope ID: DB3D6260-3BD0-8DC6-815C-0C49C463F240

Ensure that the conflict monitor will log at least nine of the most recent events detected by the monitor in non-volatile EEPROM memory (or equivalent). For each event, record at a minimum the time, date, type of event, status of each field signal indication with RMS voltage, and specific channels involved with the event. Ensure the conflict monitor will log the following events: monitor reset, configuration, previous fault, and AC line. Furnish the signal sequence log that shows all channel states (Greens, Yellows, and Reds) and the Red Enable State for a minimum of 2 seconds prior to the current fault trigger point. Ensure the display resolution of the inputs for the signal sequence log is not greater than 50 ms.

For conflict monitors used within an Ethernet communications system, provide a conflict monitor with an Ethernet 10/100 Mbps, RJ-45 port for data communication access to the monitor by a local notebook computer and remotely via a workstation or notebook computer device connected to the signal system local area network. The Ethernet port shall be electrically isolated from the conflict monitor's electronics and shall provide a minimum of 1500 Vrms isolation. Integrate monitor with Ethernet network in cabinet. Provide software to retrieve the time and date from a network server in order to synchronize the on-board times between the conflict monitor and the controller. Furnish and install the following Windows based, graphic user interface software on workstations and notebook computers where the signal system client software is installed: 1) software to view and retrieve all event log information, 2) software that will search and display a list of conflict monitor IP addresses and IDs on the network, and 3) software to change the conflict monitor's network parameters such as IP address and subnet mask.

For non-Ethernet connected monitors, provide a RS-232C/D compliant port (DB-9 female connector) on the front panel of the conflict monitor in order to provide communications from the conflict monitor to the 170/2070 controller or to a Department-furnished laptop computer. Electrically isolate the port interface electronics from all monitor electronics, excluding Chassis Ground. Ensure that the controller can receive all event log information through a controller Asynchronous Communications Interface Adapter (Type 170E) or Async Serial Comm Module (2070). Furnish and connect a serial cable from the conflict monitor's DB-9 connector to Comm Port 1 of the 2070 controller. Ensure conflict monitor communicates with the controller. Provide a Windows based graphic user interface software to communicate directly through the same monitor RS-232C/D compliant port to retrieve and view all event log information to a Department-furnished laptop computer. The RS-232C/D compliant port on the monitor shall allow the monitor to function as a DCE device with pin connections as follows:

Docusign Envelope ID: DB3D6260-3BD0-8DC6-815C-0C49C463F240

Conflict Monitor RS-232C/D (DB-9 Female) Pinout		
Pin Number	**Function**	**I/O**
1	DCD	O
2	TX Data	O
3	RX Data	I
4	DTR	I
5	Ground	-
6	DSR	O
7	CTS	I
8	RTS	O
9	NC	-

Docusign Envelope ID: DB3D6260-3BD0-8DC6-815C-0C49C463F240

MONITOR BOARD EDGE CONNECTOR

Pin #	Function (Back Side)	Pin #	Function (Component Side)
1	Channel 2 Green	A	Channel 2 Yellow
2	Channel 13 Green	B	Channel 6 Green
3	Channel 6 Yellow	C	Channel 15 Green
4	Channel 4 Green	D	Channel 4 Yellow
5	Channel 14 Green	E	Channel 8 Green
6	Channel 8 Yellow	F	Channel 16 Green
7	Channel 5 Green	H	Channel 5 Yellow
8	Channel 13 Yellow	J	Channel 1 Green
9	Channel 1 Yellow	K	Channel 15 Yellow
10	Channel 7 Green	L	Channel 7 Yellow
11	Channel 14 Yellow	M	Channel 3 Green
12	Channel 3 Yellow	N	Channel 16 Yellow
13	Channel 9 Green	P	Channel 17 Yellow
14	Channel 17 Green	R	Channel 10 Green
15	Channel 11 Yellow	S	Channel 11 Green
16	Channel 9 Yellow	T	Channel 18 Yellow
17	Channel 18 Green	U	Channel 10 Yellow
--		--	
18	Channel 12 Yellow	V	Channel 12 Green
19	Channel 17 Red	W	Channel 18 Red
20	Chassis Ground	X	Not Assigned
21	AC-	Y	DC Common
22	Watchdog Timer	Z	External Test Reset
23	+24VDC	AA	+24VDC
24	Tied to Pin 25	BB	Stop Time (Output)
25	Tied to Pin 24	CC	Not Assigned
26	Not Assigned	DD	Not Assigned
27	Relay Output, Side #3, N.O.	EE	Relay Output,Side #2,Common
28	Relay Output, Side #1, N.C.	FF	AC+

-- Slotted for keying between Pins 17/U and 18/V

Docusign Envelope ID: DB3D6260-3BD0-8DC6-815C-0C49C463F240

CONFLICT PROGRAM CARD PIN ASSIGNMENTS

Pin #	Function (Back Side)	Pin #	Function (Component Side)
1	Channel 2 Green	A	Channel 1 Green
2	Channel 3 Green	B	Channel 2 Green
3	Channel 4 Green	C	Channel 3 Green
4	Channel 5 Green	D	Channel 4 Green
5	Channel 6 Green	E	Channel 5 Green
6	Channel 7 Green	F	Channel 6 Green
7	Channel 8 Green	H	Channel 7 Green
8	Channel 9 Green	J	Channel 8 Green
9	Channel 10 Green	K	Channel 9 Green
10	Channel 11 Green	L	Channel 10 Green
11	Channel 12 Green	M	Channel 11 Green
12	Channel 13 Green	N	Channel 12 Green
13	Channel 14 Green	P	Channel 13 Green
14	Channel 15 Green	R	Channel 14 Green
15	Channel 16 Green	S	Channel 15 Green
16	N/C	T	PC AJAR
17	Channel 1 Yellow	U	Channel 9 Yellow
18	Channel 2 Yellow	V	Channel 10 Yellow
19	Channel 3 Yellow	W	Channel 11 Yellow
20	Channel 4 Yellow	X	Channel 12 Yellow
21	Channel 5 Yellow	Y	Channel 13 Yellow
22	Channel 6 Yellow	Z	Channel 14 Yellow
23	Channel 7 Yellow	AA	Channel 15 Yellow
24	Channel 8 Yellow	BB	Channel 16 Yellow
--		--	
25	Channel 17 Green	CC	Channel 17 Yellow
26	Channel 18 Green	DD	Channel 18 Yellow
27	Channel 16 Green	EE	PC AJAR (Program Card)
28	Yellow Inhibit Common	FF	Channel 17 Green

-- Slotted for keying between Pins 24/BB and 25/CC

Docusign Envelope ID: DB3D6260-3BD0-8DC6-815C-0C49C463F240

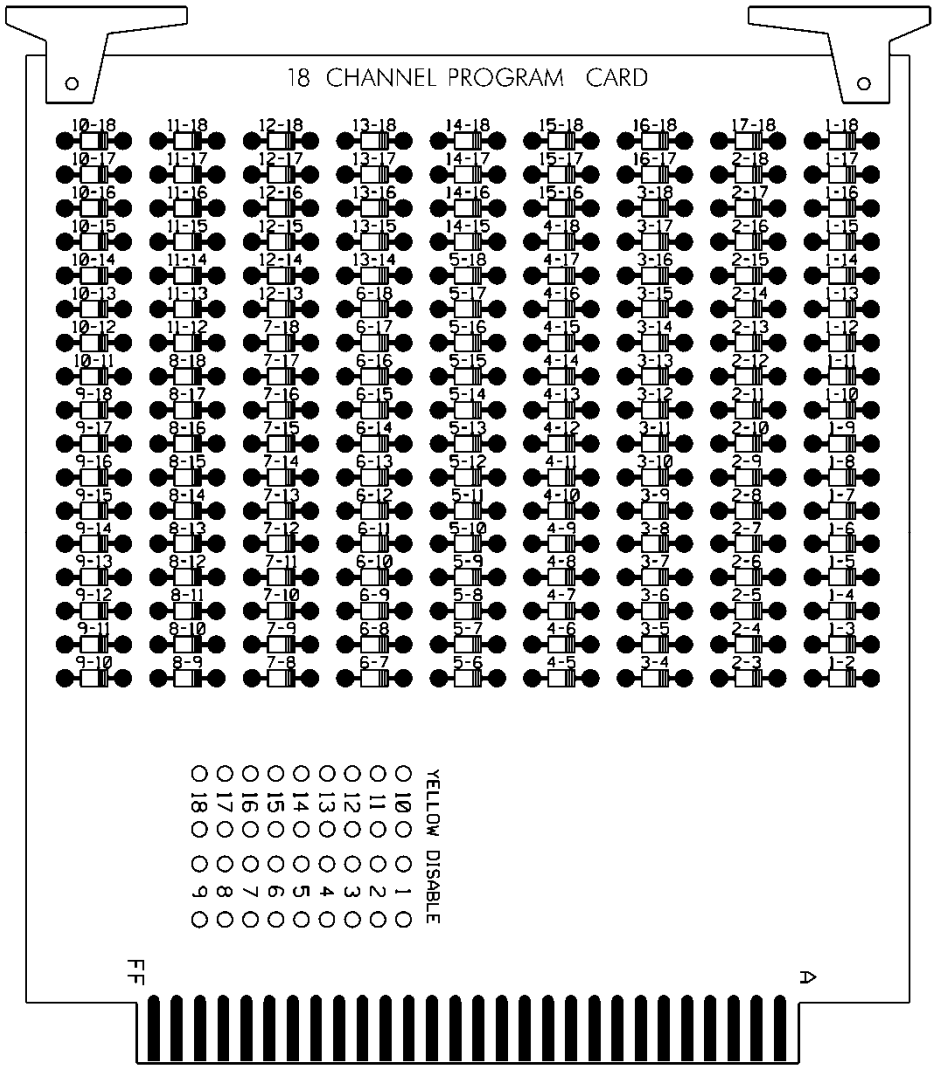

3.4 MATERIALS – TYPE 170 DETECTOR SENSOR UNITS

Furnish detector sensor units that comply with Chapter 5 Section 1, "General Requirements," and Chapter 5 Section 2, "Model 222 & 224 Loop Detector Sensor Unit Requirements," of the CALTRANS "Transportation Electrical Equipment Specifications" dated March 12, 2009 with Erratum 1.

4. PUSH BUTTON INTEGRATED ACCESSIBLE PEDESTRIAN SIGNAL (APS)

4.1 DESCRIPTION

Furnish and install push button integrated accessible pedestrian signals that include pedestrian pushbutton, pushbutton locator tone, raised tactile arrow, audio and vibro-tactile walk indications, automatic volume adjustment, pedestrian information sign, and all necessary hardware. Furnish the R10-3e with appropriate arrow direction for the pedestrian information sign.

Docusign Envelope ID: DB3D6260-3BD0-8DC6-815C-0C49C463F240

4.2 MATERIALS

Furnish material, equipment, and hardware under this section that is pre-approved on the ITS and Signals QPL and meet the latest MUTCD Standards.

Provide the accessible pedestrian signals with a 2-inch diameter pedestrian push button that contains a tactile arrow whose direction can be easily adjusted in the field. Ensure each push button actuates a sturdy, momentary, normally open switch with a minimum rating of 20 million actuations. Include on the button, a raised tactile arrow having a high visual contrast with the remainder of the button face. Ensure the housing is weather-tight and fabricated from non-corrosive materials.

Ensure the housing is suitable for mounting on wood and metal poles. Ensure the surfaces of the pedestrian push button housing are painted highway yellow, unless otherwise specified. Ensure an electrostatically applied fused-polyester paint method is used. If the material of the housing is inherently colored (like plastics), then no paint is required. Ensure the thickness of the paint meets the same requirement as referenced for the signal heads. Provide the pedestrian information sign that is integral to the housing.

Ensure the accessible pedestrian signals can provide tones, sounds, and speech messages that are synchronized at an intersection. Provide a means for adjusting the base sound level for the tones, sounds, and speech messages. Ensure the tones, sounds, and speech messages will adjust automatically to the ambient noise level up to a maximum of 100 dBA. Provide the custom speech messages in both English and Spanish languages. Ensure you can program the accessible pedestrian signal by a means not readily accessible by unauthorized persons Default passwords must be replaced with a unique, strong password immediately upon installation. Passwords should be at least 12 characters long and include a combination of uppercase and lowercase letters, numbers, and special characters

Ensure each push button provides a standard locator tone that is deactivated when the traffic signal is operating in the flash mode. Push button locator tones shall have a duration of 0.15 seconds or less and shall always repeat at 1-second intervals that the audible walk indication is not active, including during the pedestrian change interval and during the time that the pedestrian signal is resting in walk.

Provide a user-programmable audible beaconing feature that is initiated by an extended push button press of one second or more. When audible beaconing is used, the volume of the push button locator tone during the pedestrian change interval of the called pedestrian phase shall be increased up to a maximum of 100 dBA and shall come from a loudspeaker that is mounted at the far end of the crosswalk at a height of 7 to 10 feet above the pavement.

Provide confirmation of the push button activation by an LED pilot light. Ensure the pilot light remains illuminated until the pedestrian’s green or WALKING PERSON (symbolizing WALK) signal indication is displayed. Ensure each press of the push button initiates a “wait” speech message during all intervals except the Walk interval.

Ensure you can select a percussive tone and custom speech message to sound during the “Walk” interval. Provide a push button that vibrates during the “Walk” interval. Ensure the “Walk” indications have the same duration as the illuminated pedestrian signals except when the signal is programmed to rest in the walk interval. When the pedestrian signal is programmed to rest in walk, ensure the “Walk” indication is limited to the first 7 seconds of the walk interval. The “Walk” indication shall be recalled by a button press during the walk interval provided that the crossing time remaining is greater than the pedestrian change interval. Ensure the “Walk” indications are deactivated when the traffic control signal is operating in a flashing mode. When audible “Walk”

Docusign Envelope ID: DB3D6260-3BD0-8DC6-815C-0C49C463F240

indications are selected as a percussive tone, ensure the tone repeats at 8 to 10 ticks per second and consists of multiple frequencies with a dominant component at 880 Hz.

Ensure the accessible pedestrian signals are weatherproof and suitable for operation in wet locations. Ensure proper operation over a temperature range of -30ºF (-34ºC) to 165ºF (+74ºC). Ensure all circuit boards have a moisture resistant coating. Ensure the equipment interfaces and operates properly in an ATC and Type-170E cabinet.

If the accessible pedestrian signal is required by the Engineer to have a touchless feature, ensure a hand that is waved from 1 to 6 inches across the front of the push button activates both the walk interval and the accessible pedestrian signals.

4.3 CONSTRUCTION METHODS

Comply with the requirements of Section 1705 of the Standard Specifications. Install in accordance with the manufacturer's recommendations.

Mount push button integrated accessible pedestrian signals in a tamperproof manner on wood and metal poles, signal pedestals, or push button posts as indicated in the signal plans.

Install each push button so that the tactile arrow is pointed in the direction of travel and is aligned parallel to the direction of travel on the associated crosswalk. If a push button is installed in a median that separates two parallel crosswalks, the push button shall have a single tactile arrow that points in both directions of travel.

Ensure push buttons are separated by a distance of at least 10 feet such that they clearly indicate which crosswalk has the WALK indication. Where there are physical constraints on a particular corner that make it impractical to provide the 10 feet of separation between the two push buttons, the push buttons may be placed closer together or on the same pole, with approval by the Engineer. If two push buttons are placed on the same pole or with less than 10 feet separation, provide a speech walk message for the WALK indication and a speech push button information message. Do not use push buttons with a touchless feature where the push buttons are not separated by a distance of at least 10 feet.

Adjust the intensity of the push button locator tones so they are audible 6 feet to 12 feet from the push button, or to the building line, whichever is less. Ensure the push button locator tones are no more than 5 dBA louder than ambient sound. Configure audible "Walk" indication to be audible at the nearest end of the associated crosswalk.

If speech messages are used, have each recorded custom speech message approved by the Engineer in advance.

4.4 MEASUREMENT AND PAYMENT

APS Detector Station will be measured and paid as the actual number of push button integrated accessible pedestrian signal detector stations furnished, installed, and accepted.

Central Control Units For APS Detector Station will be measured and paid as the actual number of central control units for APS detector stations furnished, installed, and accepted.

No measurement will be made of cables or hardware, as these will be considered incidental to furnishing and installing push button integrated accessible pedestrian signals.

Payment will be made under:

Docusign Envelope ID: DB3D6260-3BD0-8DC6-815C-0C49C463F240

Pay Item	Pay Unit
APS Detector Station	Each
Central Control Units For APS Detector Station	Each

5. NON-INTRUSIVE DETECTION SYSTEMS

5.1 DESCRIPTION

A. General

Design, furnish, provide training, and install non-intrusive detection systems **(Video, Microwave, or Lidar)** with all necessary hardware in accordance with the plans and specifications. Ensure the firmware and software furnished and installed as part of an Intelligent Transportation System (ITS) or traffic signal project are the most current and approved releases or versions, unless otherwise requested by the Department. Provide all equipment, materials, and work in accordance with all manufacturers' recommendations. All equipment, cables, and hardware must be part of an engineered system that is designed by the manufacturer to fully interoperate with all other system components.

Provide a non-intrusive detection system which provides advanced and presence detection. The non-intrusive detection system includes, but is not limited to, system sensor(s), including the detector housing (if applicable), mounting hardware, non-intrusive detection system processor, system management software, cabling between the detector and the cabinet, surge suppressors, terminations, output expansion modules which mount in the traffic signal controller cabinet input files, vertical conduit, weather heads and related equipment. The non-intrusive detection system processor shall have the ability to communicate with Transportation Management Center (TMC) computers for remote access.

5.2 MATERIALS

A. General

Material and equipment furnished under this specification must be pre-approved on the Department's QPL by the date of installation. Miscellaneous hardware such as cables and mounting hardware do not need to be pre-approved.

Furnish non-intrusive detection systems with either a simple keyboard or a mouse with monitor and appropriate software, or with system software for use on Department owned laptop PCs. Provide software compatible with the latest NCDOT-approved version of Microsoft Windows to provide remote detection monitoring.

Ensure that software furnished is licensed for use by the Department and by any other agency responsible for maintaining or operating the system. Provide the Department with a license to duplicate and distribute the software as necessary for design and maintenance support.

Design and furnish non-intrusive detection systems that detect vehicles by processing system inputs and provide detection outputs in real time.

Furnish all required sensor units, detection system processor units, software packages, cabling, poles, mast arms, harnesses, mounting assemblies, surge protection panels, grounding systems, messenger cable, and all necessary hardware.

Furnish systems that allow the display of detection zones superimposed on an image of the roadway on a Department furnished monitor or laptop computer screen. Ensure detection zones can

Docusign Envelope ID: DB3D6260-3BD0-8DC6-815C-0C49C463F240

be defined and data entered using a simple keyboard or mouse and monitor, or using a laptop PC with software.

Provide design drawings showing design details and detection sensor unit locations for review and acceptance before installation. Provide mounting height and location requirements for detection sensor units on the design based on the site survey. Design non-intrusive detection systems with all necessary hardware. Do not design for the installation of poles in medians.

Obtain the Engineer's approval before furnishing the non-intrusive detection systems. The contractor is responsible for the final design of non-intrusive detection systems. Review and acceptance of the designs by the Department does not relieve the contractor from the responsibility to provide fully functional systems and to ensure that the required detection zones can be provided.

Provide all associated equipment manuals and documentation.

Use a non-intrusive sensor that is compatible with the detection system processor and meets the following technical and functional requirements:

1. Requirements

1.1 Detector Sensor

- For Microwave Detectors: Provide a detector for side-fire, forward-fire, overhead, or other appropriate configuration. Ensure the detector will detect vehicles in sunny, cloudy, rainy, snowy, and foggy weather conditions. Microwave detection systems shall be FCC-certified and have authorization to operate within the frequency range established and approved by the FCC. Detectors shall be capable of extending at minimum 200 feet from the sensor origin. Ensure the detector is provided with water-tight housing offering NEMA 4X protection.
- Signal to Noise Ratio shall be greater than 50 dB.
- For Electromagnetic interference, ensure compliance with FCC Part 15, Subpart B, Class A device requirements, which apply to the detection sensor and associated connected equipment in their installed condition.
- Furnish power cable appropriately sized to meet the power requirements of the sensors. At a minimum, provide three-conductor 120 VAC field power cable. Size the power conductors from the power source to the detector input so that no more than a 3% voltage drop is experienced (NEC 210-19 a., FPN No. 4). Provide power from the cabinet power source through a surge suppressor and then to the detection sensor.
- If the sensors support Power-over-Ethernet, provide any external POE injectors that are required. Ensure the POE injectors meet the following minimum requirements:
- Working temp/humidity: 14º F to 131º F/maximum 90%, non-condensing
- Connectors: Shielded RJ-45, EIA 568A and EIA 568B
- Input Power: 100 to 240 VAC, 50 to 60 Hz
- Pass Through Data Rates: 10/100/1000 Mbps
- Regulatory: IEEE 802.3bt (POE)
- Number of Ports: 1 In and 1 Out
- Safety Approvals: UL Listed

Docusign Envelope ID: DB3D6260-3BD0-8DC6-815C-0C49C463F240

- Ensure the POE Injector is designed for Plug-and-Play installation, requiring no configurations and supports automatic detection and protection of non-standard Ethernet Terminal configurations.
- All connections to the system sensor assembly shall be professionally sealed to manufacturer recommendations to ensure a waterproof connection.
- Where cables, power cables, and other cables are required between the sensor assembly and other components located in the controller cabinet, furnish surge protection in the controller cabinet.
- If furnishing cable, comply with manufacturer recommendations.
- Provide terminal blocks and tie points for cable.
- Environmental: Ensure that temperature and humidity limits of the sensor adhere to the latest published version of NEMA TS-2 requirements.
- Shock and Vibration: Ensure the sensor adheres to shock and vibration requirements of the latest published version of NEMA TS-2 and, where applicable, IEC 60068.

1.2 Detector Sensor

Furnish detection system processors that detect vehicles by processing system inputs and provide detection outputs in real time. The detection system processor shall accept inputs from the detectors installed at the intersection such that signals from one or more sensors can be processed in real time. If required, additional detection system processors should be provided to handle the number of detectors installed at the location. As a minimum, meet the following requirements for each non-intrusive detection system processor installation.

- Provide a “fail-safe” mode whereby failure of one or more of the detector sensor units or power failure of the system will cause constant calls to be placed on the affected detection outputs.
- Provide compensation for minor movement of up to 2 percent of the field of view at 400 **feet** without falsely detecting vehicles.
- Include detection indicators on the front panel of the processor module for each channel of detection provided through that module to indicate detector output in real time when the system is operational.
- Include an RJ-45 Ethernet port connector on the system processor to enable communication from a programming device.
- Provide the ability to remotely monitor detectors and system.
- Ensure the system supports SDLC communications to a NEMA TS-2 cabinet or an ATC cabinet. The system shall also support a wired I/O interface for integration into Caltrans Type 170 cabinets or NEMA TS-2 type cabinets.
- Ensure the system supports both NEMA TS-2 SDLC communications and wired I/O interface for integration into Caltrans Type 170 cabinets or NEMA TS-2 type cabinets.
- Provide a detection system processor that operates reliably in a typical roadside traffic cabinet environment.

Docusign Envelope ID: DB3D6260-3BD0-8DC6-815C-0C49C463F240

- Environmental: Ensure that temperature and humidity limits of the system processor adhere to the latest published version of NEMA TS-2 requirements
- Shock and Vibration: Ensure the sensor adheres to shock and vibration requirements of the latest published version of NEMA TS-2 and, where applicable, IEC 60068.

Ensure processor modules that plug into a detector rack or input file meet the following requirements:

- Ensure the processor module completely fits within the loop detector slots of the traffic signal controller cabinet input file and that provides a standard relay closure detector input to the controller.
- Provide from one to four detector outputs through the processor module which communicate through the input file edge card connector.
- Use a module that is not wider than two standard input file slots.
- Provide power to the processor modules through the signal cabinet detector input file.

2. Functional Requirements for Non-intrusive Detection Systems

Provide the ability to program each detection call (input to the controller) with the following functions:

- Full Time Delay – Delay timer is active continuously,
- Extend – Call is extended for this amount of time after vehicle leaves detection area,
- Delay Call/Extend Call – This feature uses a combination of full-time delay and extend time on the same detection call. Ensure operation is as follows: Vehicle calls are received after the delay timer times out. When a call is detected, it is held until the detection area is empty and the programmed extend time expires. If another vehicle enters the detection area before the extend timer times out, the call is held and the extend time is reset. When the extend timer times out, the delay timer must expire before another vehicle call can be received.

Ensure that Detection Systems provide advanced and presence detection. Verify that the system can, at a minimum, emulate the output of a pair of 6 ft. by 6 ft. in-pavement loops spaced 16 ft. apart.

Provide the capability to create detection zones of varying size and shape to allow the best coverage of the viewable roadway lanes and ramps. Provide the capability to save the detection zone format on the processor module card once drawn for a particular sensor image.

Ensure the system allows the user to edit previously defined detector configurations. Ensure the system user can use a laptop to reprogram, calibrate, adjust or alter any previously defined detector configurations in the field and reprogram any detector configurations over the network or from a remote location.

Ensure detection zones can be overlapped. Ensure the system can detect vehicles in multiple travel lanes.

Detect either approaching or receding vehicles in multiple lanes within the field of view (FOV) of each non-intrusive sensor. Provide the capability of detecting vehicles in at least

Docusign Envelope ID: DB3D6260-3BD0-8DC6-815C-0C49C463F240

24 detection zones per non-intrusive sensor with the detection system. Allow the detection zones to be combined to form one output.

When a vehicle is within a detection zone, provide for a change in color or intensity of the detection zone perimeter or other appropriate display changes on the monitor or Department furnished laptop computer screen.

Verify that any traffic data collected by the system and the system configuration is stored within internal non-volatile memory within the non-intrusive detection system processor. Perform software updates through an Ethernet, serial, or USB port. Verify that data can be retrieved from the system either locally or via requests from computers at the central Transportation Management Center (TMC) over the communications network.

Ensure the detection system includes computer software, which enables the user to program, calibrate, operate, and view current status of all system features using a laptop computer, or network-connected workstation at the central TMC. Ensure individual vehicle actuations can be viewed while observing the systems input data.

Ensure the non-intrusive detection system configuration data can be uploaded and saved to a laptop or TMC workstation computer for later re-loading to the non-intrusive detection processor if necessary.

Verify that the detection system is IP-addressable and that all communication addresses are user programmable. Ensure the setup program assigns an IP address to the detection processor.

Ensure the detection system processor front panel includes a visual display of the status of each input. Indicators shall display, at a minimum, the status of the detection system processor communications, the status of the detection system processor, the status of communications, and whether each sensor is actively detecting. The processor shall allow a remote user to gain remote access, collect data, control, and configure the system.

3. Accuracy Requirements for Non-intrusive Detection Systems

Provide a non-intrusive detection system that meets the below minimum accuracy requirements:

Parameter	Condition	Accuracy (System)	False Detection	Missed Detection
Presence Detection	Daytime	95% - 110%	10%	5%
Presence Detection	Nighttime	95% - 115%	15%	5%
Presence Detection	Adverse Weather	95% - 115%	15%	5%

Docusign Envelope ID: DB3D6260-3BD0-8DC6-815C-0C49C463F240

Parameter	Condition	Accuracy (System)	False Detection	Missed Detection
Advanced Detection	Daytime	95% - 110%	10%	5%
Advanced Detection	Nighttime	95% - 115%	15%	5%
Advanced Detection	Adverse Weather	95% - 115%	15%	5%

Table 1a: Outlines the requirements for the average system accuracy.

Non-intrusive detection system averages shall consistently satisfy the system-level performance criteria defined in Table 1a with minimal variance from these parameters during the selected testing period(s). It is recognized that individual detector units may operate under variable field conditions that constrain strict adherence to these parameters. A tolerance band of ±20% in place of the specified values is therefore allowable for individual detectors as shown in Table 1b. Individual detectors shall consistently meet these parameters.

Parameter	Condition	Accuracy (Detector)	False Detection	Missed Detection
Presence Detection	Daytime	80% - 120%	20%	20%
Presence Detection	Nighttime	80% - 120%	20%	20%
Presence Detection	Adverse Weather	80% - 120%	20%	20%

Parameter	Condition	Accuracy (Detector)	False Detection	Missed Detection
Advanced Detection	Daytime	80% - 120%	20%	20%
Advanced Detection	Nighttime	80% - 120%	20%	20%
Advanced Detection	Adverse Weather	80% - 120%	20%	20%

Table 1b: Outlines the requirements for the accuracy of the individual detectors.

4. Testing

Develop and submit plans for post installation testing to the Engineer for consideration and approval. Ensure the plans test all functional requirements and the accuracy requirements stipulated in the specifications. Further guidance and testing resources may be obtained by contacting the Product Qualification Engineer in the TSMO unit.

4.1 Post Installation Test Requirements

Utilize the following test procedures after the non-intrusive detection system has been installed in its entirety. Commence no post-installation testing until all non-intrusive detection systems in the project have been configured and/or calibrated to gather speed, volume, occupancy and/or presence detection. Including the accuracy testing requirements, at a minimum, provide the following on the test plan to be submitted and approved by the Engineer:

- Inspect all vehicle detection system field components to ensure proper installation and cable termination.
- Verify that field construction has been completed.
- Inspect the quality and tightness of ground and surge protector connections.

Docusign Envelope ID: DB3D6260-3BD0-8DC6-815C-0C49C463F240

- Check power supply voltage and outputs and ensure device connections are as specified in the Plans and specifications.
- Verify that the installation of cables and connections between all detectors and field cabinets are as specified in the Plans and specifications.
- Demonstrate that each non-intrusive Detection System is fully operational and collecting the required data types at the specified interval.

5.3 CONSTRUCTION METHODS

A. Construction

1. Non-Intrusive Detection System Installation Requirements

1.1 General Installation Requirements

Arrange and conduct site surveys with Department personnel, and the system manufacturer's representative as necessary, to determine proper detector sensor unit selection and placement. Provide the Department at least 3 working days' notice before conducting site surveys. The non-intrusive detection system's manufacturer shall provide support both remotely and on-site for all phases of the installation.

Before beginning work at locations requiring non-intrusive detection systems, furnish system software. Upon activation of detection zones, provide detector configuration files. Ensure that up-to-date detection configuration files are furnished for various detection zone configurations that may be required for construction phasing.

Place into operation non-intrusive detection systems. Configure non-intrusive detection systems to achieve required detection in designated zones. If requested, have a certified manufacturer's representative on site to supervise and assist with installation, set up, and testing of the system.

Install all non-intrusive detection sensors, non-intrusive detection system processors, output expansion modules, and associated enclosures and equipment per manufacturer recommendations. Make all necessary adjustments and modifications to the detection system prior to obtaining recommendation for system acceptance testing.

Installation, surge protection, and all cabling shall comply with manufacturer's recommendations, at a minimum, or as specified in the plans. All equipment, cables, and hardware must be part of an engineered system that is designed by the manufacturer to fully interoperate with all other system components and be fully protected from all surge potential. Connectors installed outside the cabinets and enclosures shall be manufacturer terminated and be corrosion resistant, weatherproof, and watertight. Use a UL listed cable that is ozone and UV resistant and weather resistant. Label cables with permanent cable labels at each end.

Relocate detector sensor units and reconfigure detection zones as necessary according to the plans for construction phases.

Furnish an as-built cabinet wiring diagram, identified by location, for each non-intrusive detection system cabinet. Include all wiring, cabling, connections, and

Docusign Envelope ID: DB3D6260-3BD0-8DC6-815C-0C49C463F240

detector mounting height. Furnish an operation manual with programming instructions and a maintenance manual. Place all documentation in a weatherproof holder in the cabinet. Provide an additional copy of the documentation to the Engineer.

1.2 Detector Sensor Installation

Adjust the detector sensor as recommended by the manufacturer, and as required to minimize vehicle occlusion. For Video detection systems, aim the camera so that no part of the horizon is in the video image to protect it from the effects of the sun.

1.3 Cabinet Equipment

Install all non-intrusive detection system equipment into a cabinet with the following equipment:

Wiring, Conductors and Terminal Blocks: Use stranded copper for all conductors, including those in jacketed cables, except for earth ground conductors, which may be solid copper. Neatly arrange all wiring, firmly lace or bundle it, and mechanically secure the wiring without the use of adhesive fasteners. Route and secure all wiring and cabling to avoid sharp edges and to avoid conflicts with other equipment or cabling. Route detector control wiring, and 120 VAC power wiring separately. Terminate all wiring on a terminal block, strip, busbar, or device clamp or lug; do not splice any wiring.

Label cables for detection system sensors. Number all terminal blocks, terminal strips, circuit breakers, and busbar breakers and have each item and each terminal position numbered and named according to function. Labels shall be weather and wear resistant.

Protect all copper wiring and cabling entering the cabinet housing by surge protection devices. Terminate all wiring between cabinet devices and the transient surge protection devices, except for the signal feed, on terminal strips. Use a minimum #16 AWG grounding wire for each surge protection device, or larger if recommended by the surge protection device manufacturer. Do not “daisy chain” with the grounding wires of other devices including other surge suppressors. Install grounding wires with the absolute minimum length possible between the surge protection device and the ground busbar. Label all surge protection devices on the mounting panel.

Furnish and install a surge suppressor for each signal line. The surge protection device shall have a surge current rating of 10 kA. For each cabinet housing, include surge protection devices for the detection system power lines installed on the terminal block.

All surge protection shall be furnished and installed by the Contractor to protect not only the cabinet processor, but the detector sensor itself from ground rise potential (i.e., surge up to the detector sensor).

Docusign Envelope ID: DB3D6260-3BD0-8DC6-815C-0C49C463F240

B. Quality Acceptance/Testing

The acceptance testing of the vehicle detection systems shall consist of two phases: 1) post installation detection system testing, as outlined in these specifications and 2) burn-in period. Perform acceptance testing for all equipment, hardware, and work as provided under these specifications. Perform all testing in the presence of the Engineer. Submit all testing plans and documents to the Engineer during the submittal phase of the vehicle detection equipment.

1. Burn-in Period

1.1 General Requirements

Provide a 30-day burn-in period for all work and equipment included in the Contract and associated with the vehicle detection system. The burn-in period shall consist of the field operation of the specific vehicle detection system in a manner that is in full accordance with the requirements of the Plans and Specifications.

Conduct only one (1) burn-in period on the entire Contract for all vehicle detection devices. Burn-in tests of individual vehicle detection devices or groups of vehicle detection devices will not be acceptable. Commence with the burn-in period only after meeting all of the following requirements:

All work required in all Contract documents for the vehicle detection system project-wide has been completed and inspected by the Engineer.

Successfully complete the post-installation vehicle detection system testing.

Commence with the burn-in period upon written authorization by the Department to commence. Terminate the burn-in period 30 consecutive days thereafter unless an equipment malfunction occurs. Stop the burn-in period for the length of time any equipment is defective. After repairing the equipment so that it functions properly, resume the burn-in period at the point it was stopped.

Successful completion and acceptance of the burn-in period will be granted on the 31st day unless any equipment has malfunctioned. If any equipment has failed during the burn-in period, final acceptance will be withheld until all the equipment is functioning properly.

When one specific piece of equipment has malfunctioned more than three times during the 30-day burn-in period, replace that unit with a new unit at no cost to the Department. Multiple failures of detection devices in different locations shall be determined as a failure of the 30-day burn-in period. The Contractor shall investigate the detection system failure and shall give a full report to the Engineer. The Contractor shall replace the failed devices and shall restart the burn-in period at Day 1, once those devices have been replaced and retested.

1.2 Contractor Responsibilities

During the burn-in period, maintain all work under this Contract in accordance with the Plans and Specifications. Restore any work or equipment to proper operating condition within 8 hours after notification.

1.3 Department Responsibilities

Department responsibilities during the burn-in period will be as follows:

Docusign Envelope ID: DB3D6260-3BD0-8DC6-815C-0C49C463F240

- Expeditious notification of Contractor upon failure or malfunction of equipment.

1.4 Burn-in Period Acceptance

The Department will make burn-in period acceptance after satisfactory completion of the required burn-in period and based on a comprehensive field inspection of the complete vehicle detection system in accordance with the Specifications. Upon burn-in period acceptance but prior to Final Acceptance of the entire Contract, the Contractor is responsible for all maintenance of the vehicle detection system(s) installed or renovated in accordance with the specifications.

C. Contractor Warranty and Maintenance

Equipment provided under this specification shall be warranted by the manufacturer to be free from defects in materials and workmanship for a minimum of three (3) years from burn-in period acceptance.

The manufacturer and supplier's warranties shall be transferable to the agency or user that is responsible for maintenance and shall be continuous throughout their duration.

During the warranty period, the manufacturer shall repair or replace any faulty equipment without cost to the purchaser, NCDOT, or the maintaining agency for all incidentals to the repair or replacement, including but not limited to parts, labor, or shipping.

The manufacturer shall be responsible for providing firmware or software updates associated with the non-intrusive detection system at no cost to NCDOT or the maintaining agency during the warranty period. Further, the manufacturer is also responsible for ensuring that any updates will not degrade the original functionality of the product warranted.

The manufacturer and/or supplier shall provide consultation to the Department or user that is responsible for maintenance as needed at no cost during the warranty period for operating questions or problems that arise.

5.4 MEASUREMENT AND PAYMENT

Microwave Vehicle Detector – Multiple Zones (Presence) will be measured and paid as the actual number of Microwave Vehicle Detectors – Multiple Zone (Presence) furnished, installed, and accepted.

No measurement will be made of environmental enclosures, mounting assemblies and hardware, cables, connectors, interfaces, supplies, or other items necessary for proper operation of the non-intrusive detection system as these items will be considered incidental to furnishing and installing non-intrusive sensor assemblies.

Non-Intrusive Detection System Processor will be measured and paid as the actual number of non-intrusive detection system processor units furnished, installed, and accepted.

No measurement will be made of power supplies, power and communication wiring, necessary housing and rack assemblies, or configuration software as these items will be considered incidental to furnishing and installing non-intrusive detection system processors.

No measurement will be made of non-intrusive detection system support, adjustments or repositioning, power and detector cables, and trenching as these items will be considered incidental to furnishing and installing non-intrusive detection systems.

Docusign Envelope ID: DB3D6260-3BD0-8DC6-815C-0C49C463F240

Payment will be made under:

Pay Item	Pay Unit
Microwave Vehicle Detector – Multiple Zones (Presence)	Each
Non-intrusive Detection System Processor	Each

6. PROTECTIVE COATING FOR METAL POLES

6.1 General

This special provision is intended for use as an additional treatment to metal traffic signal structures installed in areas where maintaining an aesthetic appearance is important and specified in the project documents. The provision contains all of the requirements necessary to accomplish this additional treatment to galvanized steel traffic signal structures fabricated by a steel manufacturer using their local powder coating/paint facility and includes the material and shop certification requirements. The provision also contains pay items for protective coating treatment to aluminum signal and pedestrian pedestals that are *Standard Specification* items (See Section 1743 and associated *Standard Drawings*). These aluminum pedestals are on the Qualified Product List (QPL), and as such would not likely be powder coated at the same facility and thus not bound by the material certification requirements in this provision. In this case, the pedestal supplier should comply with Type 6 – Supplier's Certification as defined in Section 106-3 of the *Standard Specifications*.

6.2 Description

Protective coating for metal poles is a supplemental durable color coating that is applied to galvanized steel and aluminum traffic signal structures. Powder Coating is the preferred supplemental protective coating process for coating galvanized steel and aluminum structures. However, for the purposes of this special provision, an Acrylic Primer and topcoat paint system is included as an acceptable alternative when protective color coating is required.

Provide protective coating over galvanization for all steel poles including all necessary hardware in accordance with the plans and specifications.

6.3 Materials

With the exception of aluminum components, furnish all metal poles with galvanic protection along with a tough and durable application of protective coating. Aluminum components shall have a durable powder coating application. Galvanization is not required for aluminum components.

Furnish pole caps that have a low gloss powder finish applied over a hot-dipped galvanized surface. Comply with the applicable provisions of Section 442-10 and 442-13 of the 2024 *Standard Specifications*.

Ensure the selected color for protective coating, black semi-gloss (#27038), has been verified and approved by the Engineer prior to fabrication.

6.4 Facility Approval

The Department maintains an approved producer/supplier listing for various facility types associated with this work, which include powder applicator (PA), structural steel galvanizer (SSG), and structural steel shop coating facilities (SCF). A complete list of approved facilities can be found at the following weblink: https://apps.ncdot.gov/vendor/ApprovedProducts/Producer.aspx Approve the

Docusign Envelope ID: DB3D6260-3BD0-8DC6-815C-0C49C463F240

coating shop facility prior to the application of any coating process. Submit all new facility requests, procedures, and documents electronically to:

Materials and Test
1801 Blue Ridge Road
Raleigh, NC 27607
Attn: Manufactured Products Engineer

Powder Coating Shop Approval

A) Submit a quality control procedure that the company has established to ensure a quality and durable coating. The quality control procedure shall contain at a minimum the following:
   - Qualified / Certified personnel to manage the QC Program and to conduct Quality Control tests
   - Qualified / certified coaters
   - Source and type of powder
   - How the powder will be stored
   - Powder application facility (heated or unheated)
   - Surface pre-treatment
   - Surface preparation including profile
   - Application methods
   - Curing conditions (conventional or infrared)
   - Curing Temperature
   - Adhesion & Holiday Detection
   - Repair Procedure
   - Storage and protection of coated items
   - Shipping and handling (packing, protection, and wrapping)

B) Submit a powder certification from the manufacturer.

C) Submit the following to the Chemical Testing Engineer a minimum of four weeks prior to coating application.
   1. Two test panels of ASTM A36 steel, ¼ or greater in thickness measuring 8 inches by 11 inches using the proposed color of the final coat; a powder coated over galvanized test panel and a powder coated over un-galvanized test panel.
   2. In addition, provide two (2) samples of the same or comparable material and thickness as production pieces. Ensure production piece replicas do not exceed twelve inches (12”) in length and width nor 50 pounds in weight.
   3. Submit all test panels with inspection reports and records according to *Standard Specifications*, Section 442, Section 1072, Section 1076, and Section 1080.
   4. Acceptance of the panels is determined by meeting the requirements of ASTM D-4541 of 800 psi for both galvanized and un-galvanized and production piece test panels.

Docusign Envelope ID: DB3D6260-3BD0-8DC6-815C-0C49C463F240

5. Send all panels to:

   Materials and Tests Unit
   1801 Blue Ridge Road
   Raleigh, NC 27607
   Attn: Chemical Lab

6.5 POWDER COATING

A. Galvanizing

Galvanize steel products in accordance with Section 1076 of the *Standard Specifications*. Ensure the fabricator or designated representative(s) that is supplying the components to be galvanized communicates with the galvanizer to indicate that the galvanized pieces will be powder coated to avoid water or chromate quenching.

B. Surface Preparation

Comply with manufacturer's recommended surface coating specifications, Steel Structure Painting Council (SSPC) specifications and applicable articles of Section 442 (Painting Steel Structures) of the *Standard Specifications*. Ensure that surface preparations and treatments are performed and meet the requirements of the above referenced specifications.

Some pole components, specifically steel plates ¾ inches or more in thickness, may need blast cleaning prior to structure assembly to remove impurities and non-metallic foreign materials. Mechanically remove all weld flux after structure is assembled

Degrease and prepare steel structure for zinc coating after assembly using full immersion baths and pickling processes in heat controlled caustic and acid solutions. Rinse and clean structure to remove caustic or acid solutions by immersion in a circulating fresh water bath. Immerse structure in a heat controlled concentrated zinc ammonium chloride flux solution and air dry as a final prep before hot-dip galvanization.

Ensure that the surface preparation is no less than specified by the powder manufacturer's recommendations. Prepare all components to be coated in accordance with SSPC SP-2 (Hand Tool Cleaning) and/or SSPC SP-3 (Power Tool Cleaning). Remove all drainage spikes, high spots, protrusions or other surface defects using hand or power tools. Do not remove the galvanization below the limits set forth in AASHTO M111.

Remove grease, oils, moisture, scale, rust or any other foreign matter prior to powder coating to ensure ideal adhesion and coating performance. Prepare and coat the galvanized surface as soon as possible after the galvanization process.

C. Powder Coating Application and Curing

Prepare galvanized finish for powder coating by brush blasting in accordance with SSPC-SP7. Ensure all threaded components of the structure are protected from damage during blasting process.

Use thermosetting powder resin that meets 5A or 5B classifications of ASTM D3359. Apply powder coating electrostatically. Follow manufacturer's recommended preheating requirements. Ensure the topcoat finish is applied uniformly to all surfaces with a dry film thickness of between 3.0 to 5.0 mils. Cure the topcoat by heating the structure to manufacturer recommended temperatures at the duration required to ensure complete and uniform bond.

Docusign Envelope ID: DB3D6260-3BD0-8DC6-815C-0C49C463F240

D. Quality Control

Ensure the applicator provides all test reports and documentation and inspects all coated material as outlined in the *Standard Specifications*, Section 442, Section 1072, Section 1076, and Section 1080. Ensure the quality control inspection is kept separate from the production functions.

E. Storage, Shipping, and Handling

Store all powder coated material inside or as directed by the Engineer.

Protect the product from incurring damage during all shipping, handling, and storing activities. Do not store the product directly on the ground or in areas where water may pool; the Engineer determines the effectiveness of all storage, shipping and handling methods.

F. Repair of Powder Coated Material

Repair all damage to the coating by the original method of application as outlined in the coating facility's repair procedure. Ensure all repair areas meet the original requirements for adhesion as stated in this Project Special Provision.

Photograph, document, and report all damages upon delivery to the project site prior to unloading. Provide documented damage notifications to the Engineer or to their authorized representative so the application firm can be notified. The Engineer has the authority to accept or reject the material as outlined in the *Standard Specifications*.

Submit to the Engineer a repair procedure for damaged coatings which occur during storage, transporting, handling and or installation. Utilize a liquid paint approved by the Department, compatible with the powder applied product. Ensure all repair areas demonstrate an adhesion rating of 400 psi in accordance with ASTM D-4541. Obtain Engineer's acceptance of the final finish.

6.6 ACRYLIC PRIMER AND TOPCOAT PAINT SYSTEM

A. Description

Follow NCDOT procedures for Powder Coating over Galvanizing. Provide an Acrylic Primer and topcoat when a substitute for powder coating is necessary.

Provide supplemental coating for all mast arms with metal signal poles and all necessary hardware for the signalized intersection in accordance with the Structural Steel Shop Coatings Program, NCDOT *Standard Specifications* – sections 442 and 1080, as contained herein, and as shown on the plans. The Structural Steel Shop Coatings Program can be found at the following link: https://connect.ncdot.gov/resources/Materials/MaterialsResources/Structural%20Steel%20Shop%20Coatings%20Program.pdf

Ensure all painting work for new structures, except field touch-up and bolt painting is performed in the shop.

Coatings Shop Approval

Use only NCDOT approved shop coating facilities meeting the requirements outlined in the current edition of the Structural Steel Shop Coatings Program. This program is available on the Materials and Tests website. Structural Steel Shop Coatings Program.pdf (ncdot.gov)

Provide shop certification in accordance with the Structural Steel Shop Coatings Program (Shop facilities that are currently certified and in good standing with the American Institute Steel Construction (AISC) / Sophisticated Paint Endorsement (SPE) and/or the Society of Protective Coatings (SSPC) Qualification Procedure Three (QP-3).

Docusign Envelope ID: DB3D6260-3BD0-8DC6-815C-0C49C463F240

B. Surface Preparation

Ensure all surface preparation is not less than that specified by the paint manufacturer's recommendations.

Clean galvanized surfaces to be painted with a 2,500-psi pressure washer. Allow surfaces to dry completely before beginning surface preparation.

Ensure all components to be coated are prepared in accordance with SSPC SP2 (Hand Tool Cleaning and or SSPC SP-3 (Power Tool Cleaning). Smooth high spots and rough edges, such as metal drip lines, of galvanized surfaces in accordance with ASTM D6386. Do not remove the galvanization below the limits set forth in AASHTO M111.

Perform abrasive sweep blasting in accordance with ASTM D6386. Refer to this section for a description of the abrasive blast material to be used. Use a material and technique capable of stripping action to remove corrosion products and to provide a rough surface profile while leaving base zinc layers intact.

Blow down all blasted surfaces with clean compressed air to provide a clean, dry surface.

Ensure all surfaces are free of visible zinc oxides or zinc hydroxides.

C. Materials

Use an approved/qualified waterborne paint meeting the requirements of NCDOT *Standard Specifications* section 1080. Do not apply paint until each batch has been tested by the Department. Provide color as specified in the contract documents.

Ensure all paint used on this contract is produced by the same manufacturer.

D. Painting

Apply paint in accordance with the requirements of the Structural Steel Shop Coatings Program, Section 442 and Section 1080 of the *Standard Specifications* as modified herein.

Docusign Envelope ID: DB3D6260-3BD0-8DC6-815C-0C49C463F240

System for Paint over Galvanize
Acrylic Primer and Topcoats

Coat	Material	Mils Dry/Wet Film Thickness	Mils Dry/Wet Film Thickness
		Minimum	Maximum
Primer	1080-9 White	3.0 DFT	5.0 DFT
Stripe	1080-9 *	4.0 WFT	7.0 WFT
Topcoat	1080-9 *	2.0 DFT	4.0 DFT
Total		5.0 DFT	9.0 DFT

***Ensure the selected color for protective coating has been verified and approved by the Engineer prior to fabrication.**

The time between blast and coating application shall be in accordance with ASTM D6386 time requirements. In no case shall the prepared surface extend beyond 8 hours.

Mask off and do not paint all data plates and faying surfaces prior to application.

Spray apply all coatings except for the stripe coat. Brush apply the stripe coat to all plate edges, welds, bolt holes and bolts prior to applying the finish coat.

E. Curing

Follow manufacturer recommendations.

F. Inspection

Quality Control shall conduct the required quality control tests as outlined in the Structural Steel Shop Coatings Program and report the minimum information required by the appropriate ASTM test methods. At a minimum, quality control forms shall be on company letterhead with logo that provides a daily inspection report form equivalent to the information required on the M&T-611 Form. The M&T-611 Form can be found in the Structural Steel Shop Coatings Program. Dry Film Thickness (DFT) measurements shall be obtained on all coating layers, including the galvanized layer and shall incorporate the use of a Type 2 gauge as defined in SSPC PA-2.

Ensure all material is of a uniform appearance free of runs, drips, and sags.

G. Handling

Do not handle, ship, or erect coated members until paint is thoroughly dry.

Protect all shipping and handling either from the coating facility to project site and or storage site to area(s) to construction location from incurring damage to product. Wood blocks and nylon slings are recommended for securing, loading, hoisting or storing members.

H. Repair of Damaged Coating

Repair damage occurring to the galvanized portion of the coating during shipment or installation in accordance with Articles 1076-7 and 1080-7 of the *Standard Specifications*. Repair damage

Docusign Envelope ID: DB3D6260-3BD0-8DC6-815C-0C49C463F240

occurring to the painted portion of the coating during shipment or installation by applying 4.0-7.0 wet mils of topcoat with a brush or roller and feather or taper this to be level with the surrounding areas.

6.7 MEASUREMENT AND PAYMENT

Protective Coating for TYPE I Pushbutton Post ( ) will be measured and paid for as the actual number of signal TYPE I pedestals with protective coating applied furnished, installed, and accepted.

Protective Coating for TYPE II Signal Pedestal (_____) will be measured and paid as the actual number of signal TYPE II pedestals with protective coating applied furnished, installed, and accepted.

Payment will be made under:

Pay Item	**Pay Unit**
Protective Coating for TYPE I Pushbutton Post (Black)	Each
Protective Coating for TYPE II Signal Pedestal (Black)	Each

STANDARD SPECIAL PROVISION
AVAILABILITY OF FUNDS – TERMINATION OF CONTRACTS

(5-20-08)(Rev. 1-16-24) Z-2

General Statute 143C-6-11. (h) Highway Appropriation is hereby incorporated verbatim in this contract as follows:

(h) Amounts Encumbered. – Transportation project appropriations may be encumbered in the amount of allotments made to the Department of Transportation by the Director for the estimated payments for transportation project contract work to be performed in the appropriation fiscal year. The allotments shall be multiyear allotments and shall be based on estimated revenues and shall be subject to the maximum contract authority contained in *General Statute 143C-6-11(c)*. Payment for transportation project work performed pursuant to contract in any fiscal year other than the current fiscal year is subject to appropriations by the General Assembly. Transportation project contracts shall contain a schedule of estimated completion progress, and any acceleration of this progress shall be subject to the approval of the Department of Transportation provided funds are available. The State reserves the right to terminate or suspend any transportation project contract, and any transportation project contract shall be so terminated or suspended if funds will not be available for payment of the work to be performed during that fiscal year pursuant to the contract. In the event of termination of any contract, the contractor shall be given a written notice of termination at least 60 days before completion of scheduled work for which funds are available. In the event of termination, the contractor shall be paid for the work already performed in accordance with the contract specifications.

Payment will be made on any contract terminated pursuant to the special provision in accordance with Subarticle 108-13(D) of the *Standard Specifications*.

STANDARD SPECIAL PROVISION
NCDOT GENERAL SEED SPECIFICATION FOR SEED QUALITY

(5-17-11) Z-3

Seed shall be sampled and tested by the North Carolina Department of Agriculture and Consumer Services, Seed Testing Laboratory. When said samples are collected, the vendor shall supply an independent laboratory report for each lot to be tested. Results from seed so sampled shall be final. Seed not meeting the specifications shall be rejected by the Department of Transportation and shall not be delivered to North Carolina Department of Transportation warehouses. If seed has been delivered it shall be available for pickup and replacement at the supplier's expense.

Any re-labeling required by the North Carolina Department of Agriculture and Consumer Services, Seed Testing Laboratory, that would cause the label to reflect as otherwise specified herein shall be rejected by the North Carolina Department of Transportation.

Seed shall be free from seeds of the noxious weeds Johnsongrass, Balloonvine, Jimsonweed, Witchweed, Itchgrass, Serrated Tussock, Showy Crotalaria, Smooth Crotalaria, Sicklepod, Sandbur, Wild Onion, and Wild Garlic. Seed shall not be labeled with the above weed species on the seed analysis label. Tolerances as applied by the Association of Official Seed Analysts will NOT be allowed for the above noxious weeds except for Wild Onion and Wild Garlic.

Tolerances established by the Association of Official Seed Analysts will generally be recognized. However, for the purpose of figuring pure live seed, the found pure seed and found germination percentages as reported by the North Carolina Department of Agriculture and Consumer Services, Seed Testing Laboratory will be used. Allowances, as established by the NCDOT, will be recognized for minimum pure live seed as listed on the following pages.

The specifications for restricted noxious weed seed refers to the number per pound as follows:

Restricted Noxious **Weed**	Limitations per Lb. Of Seed	Restricted Noxious **Weed**	Limitations per Lb. of Seed
Blessed Thistle	4 seeds	Cornflower (Ragged Robin)	27 seeds
Cocklebur	4 seeds	Texas Panicum	27 seeds
Spurred Anoda	4 seeds	Bracted Plantain	54 seeds
Velvetleaf	4 seeds	Buckhorn Plantain	54 seeds
Morning-glory	8 seeds	Broadleaf Dock	54 seeds
Corn Cockle	10 seeds	Curly Dock	54 seeds
Wild Radish	12 seeds	Dodder	54 seeds
Purple Nutsedge	27 seeds	Giant Foxtail	54 seeds
Yellow Nutsedge	27 seeds	Horsenettle	54 seeds
Canada Thistle	27 seeds	Quackgrass	54 seeds
Field Bindweed	27 seeds	Wild Mustard	54 seeds
Hedge Bindweed	27 seeds		

Seed of Pensacola Bahiagrass shall not contain more than 7% inert matter, Kentucky Bluegrass, Centipede and Fine or Hard Fescue shall not contain more than 5% inert matter whereas a maximum of 2% inert matter will be allowed on all other kinds of seed. In addition, all seed shall

not contain more than 2% other crop seed nor more than 1% total weed seed. The germination rate as tested by the North Carolina Department of Agriculture shall not fall below 70%, which includes both dormant and hard seed. Seed shall be labeled with not more than 7%, 5% or 2% inert matter (according to above specifications), 2% other crop seed and 1% total weed seed.

Exceptions may be made for minimum pure live seed allowances when cases of seed variety shortages are verified. Pure live seed percentages will be applied in a verified shortage situation. Those purchase orders of deficient seed lots will be credited with the percentage that the seed is deficient.

FURTHER SPECIFICATIONS FOR EACH SEED GROUP ARE GIVEN BELOW:

Minimum 85% pure live seed; maximum 1% total weed seed; maximum 2% total other crop seed; maximum 144 restricted noxious weed seed per pound. Seed less than 83% pure live seed will not be approved.

Sericea Lespedeza
Oats (seeds)

Minimum 80% pure live seed; maximum 1% total weed seed; maximum 2% total other crop; maximum 144 restricted noxious weed seed per pound. Seed less than 78% pure live seed will not be approved.

Tall Fescue (all approved varieties)
Kobe Lespedeza
Korean Lespedeza
Weeping Lovegrass
Carpetgrass
Bermudagrass
Browntop Millet
German Millet – Strain R
Clover – Red/White/Crimson

Minimum 78% pure live seed; maximum 1% total weed seed; maximum 2% total other crop seed; maximum 144 restricted noxious weed seed per pound. Seed less than 76% pure live seed will not be approved.

Common or Sweet Sundangrass

Minimum 76% pure live seed; maximum 1% total weed seed; maximum 2% total other crop seed; maximum 144 restricted noxious weed seed per pound. Seed less than 74% pure live seed will not be approved.

Rye (grain; all varieties)
Kentucky Bluegrass (all approved varieties)
Hard Fescue (all approved varieties)
Shrub (bicolor) Lespedeza

Minimum 70% pure live seed; maximum 1% total weed seed; maximum 2% total other crop seed; maximum 144 noxious weed seed per pound. Seed less than 70% pure live seed will not be approved.

Centipedegrass
Crownvetch
Pensacola Bahiagrass
Creeping Red Fescue
Japanese Millet
Reed Canary Grass
Zoysia

Minimum 70% pure live seed; maximum 1% total weed seed; maximum 2% total other crop seed; maximum 5% inert matter; maximum 144 restricted noxious weed seed per pound.

Barnyard Grass
Big Bluestem
Little Bluestem
Bristly Locust
Birdsfoot Trefoil
Indiangrass
Orchardgrass
Switchgrass
Yellow Blossom Sweet Clover

STANDARD SPECIAL PROVISION
ERRATA

(1-16-24)(Rev. 12-15-26) Z-4

Revise the *2024 Standard Specifications* as follows:

Division 1

Page 1-1, Article 101-2 ABBREVIATIONS, line 25, replace "American Wood-Preservers' Association" with "American Wood Protection Association".

Page 1-18, Article 102-10 BID BOND OR BID DEPOSIT, line 26, replace " Subarticle 102-8(A)(8)(b)" with "Subarticle 102-8(A)(12)(b)".

Page 1-20, Subarticle 102-14(A) State Funded Projects, line 3, replace "$30,000" with "$40,000".

Page 1-20, Subarticle 102-14(B) Federal Aid Projects, line 7, replace "$30,000" with "$40,000".

Page 1-36, Subarticle 104-12(B) Evaluation of Proposals, line 21, replace "Design-Build Unit" with "Alternative Delivery Unit".

Page 1-36, Subarticle 104-12(D) Preliminary Review, line 37, replace "Design-Build Unit" with "Alternative Delivery Unit".

Page 1-37, Subarticle 104-12(E) Final Proposal, line 3, replace "Design-Build Unit" with "Alternative Delivery Unit".

Page 1-37, Subarticle 104-12(F) Design-Build VEPs, line 36, replace "Design-Build Unit" with "Alternative Delivery Unit".

Page 1-38, Subarticle 104-12(G) Modifications, line 1, replace "Design-Build Unit" with "Alternative Delivery Unit".

Division 3

Page 3-5, Article 305-2 MATERIALS, after line 16, replace " 1032-3(A)(7)" with "1032-3" and add the item "Galvanized Corrugated Steel Pipe" with Section "1032-3".

Page 3-6, Article 310-2 MATERIALS, after line 9, add the item "Galvanized Corrugated Steel Pipe" with Section "1032-3".

Division 6

Page 6-15, Article 610-1 DESCRIPTION, line 20, replace "The work includes" with "The work includes, but is not limited to,".

Page 6-15, Article 610-1 DESCRIPTION, line 22, replace “applying the tack coat as specified.” with “applying the tack coat in accordance with Section 605.”.

Page 6-30, Article 610-14 DENSITY ACCEPTANCE, line 39, replace “QC process.” with “QC process in accordance with Section 609.”.

Page 6-31, Article 610-16 MEASUREMENT AND PAYMENT, line 13, replace "*Hot Mix Asphalt Pavement*” with “*Asphalt Concrete _____ Course, Type _____*”.

Page 6-41, Article 657-3 CONSTRUCTION METHODS, line 11, delete "(air-jacketed flow)”.

Page 6-50, Subarticle 661-4(A) Equipment, lines 4-7, replace the first two sentences of the seventh paragraph with the following:

When an erected fixed stringline is utilized for longitudinal profile and cross slope control furnish and erect the necessary guide line for the equipment.

Division 7

Page 7-18, Subarticle 710-10(A) General, lines 7-8, delete “for *Surface Testing Concrete Pavement*” from the last paragraph.

Division 8

Page 8-27, Article 846-1 DESCRIPTION, line 8, delete “4 inch” from the first paragraph.

Division 9

Page 9-17, Article 904-4 MEASUREMENT AND PAYMENT, prior to line 1, replace " Sign Erection, Relocate Type (Ground Mounted)” with “Sign Erection, Relocate Type ___ (Ground Mounted)”.

Division 10

Page 10-51, Article 1024-4 WATER, prior to line 1, delete the “unpopulated blank row” in Table 1024-2 between “Time of set, deviation from control” and “Chloride Ion Content, Max.”.

Page 10-170, Subarticle 1081-1(C) Requirements, line 4, replace "maximum” with “minimum”.

Division 11

Page 11-15, Article 1160-4 MEASUREMENT AND PAYMENT, line 24, replace “Where barrier units are moved more than one” with “Where barrier units are moved more than once”.

Division 15

Page 15-10, Article 1515-4 MEASUREMENT AND PAYMENT, lines 11, replace " All piping" with "All labor, the manhole, other materials, excavation, backfilling, piping".

Division 16

Page 16-14, Article 1633-5 MEASUREMENT AND PAYMENT, line 20-24 and prior to line 25, delete and replace with the following " *Flocculant* will be measured and paid in accordance with Article 1642-5 applied to the temporary rock silt checks."

Page 16-3, Article 1609-2 MATERIALS, after line 26, replace "Type 4" with "Type 4a".

Page 16-25, Article 1644-2 MATERIALS, after line 22, replace "Type 4" with "Type 4a".

Page 16-27, Article 1644-5 MEASUREMENT AND PAYMENT, line 31, replace "Article 1630-4" with "Article 1630-3".

Division 17

Page 17-15, Article 1715-4 MEASUREMENT AND PAYMENT, line 23, delete and replace "1.25" with "1-1/4".

Page 17-15, Article 1715-4 MEASUREMENT AND PAYMENT, line 24, delete and replace ")(1.25" with ", 1-1/4".

STANDARD SPECIAL PROVISION

PLANT AND PEST QUARANTINES

(Imported Fire Ant, Guava Root Knot Nematode, Spongy Moth (formerly known as gypsy moth), Witchweed, Cogon Grass, And Any Other Regulated Noxious Weed or Plant Pest)

(3-18-03)(Rev. 3-18-25) Z-04a

Within Quarantined Area

This project may be within a county regulated for plant and/or pests. If the project or any part of the Contractor's operations is located within a quarantined area, thoroughly clean all equipment prior to moving out of the quarantined area. Comply with federal/state regulations by obtaining a certificate or limited permit for any regulated article moving from the quarantined area.

Originating in a Quarantined County

Obtain a certificate or limited permit issued by the N.C. Department of Agriculture/United States Department of Agriculture. Have the certificate or limited permit accompany the article when it arrives at the project site.

Contact

Contact the N.C. Department of Agriculture/United States Department of Agriculture at 1-800-206-9333, 919-707-3730, or *https://www.ncagr.gov/divisions/plant-industry/plant-protection/plant-industry-plant-pest-quarantines* to determine those specific project sites located in the quarantined area or for any regulated article used on this project originating in a quarantined county.

Regulated Articles Include

1. Soil, sand, gravel, compost, peat, humus, muck, and decomposed manure, separately or with other articles. This includes movement of articles listed above that may be associated with cut/waste, ditch pulling, and shoulder cutting.
2. Plants with roots including grass sod.
3. Plant crowns and roots.
4. Bulbs, corms, rhizomes, and tubers of ornamental plants.
5. Hay, straw, fodder, and plant litter of any kind.
6. Clearing and grubbing debris.
7. Used agricultural cultivating and harvesting equipment.
8. Used earth-moving equipment.
9. Any other products, articles, or means of conveyance of any character, if determined by an inspector present a hazard of spreading imported fire ant, guava root knot nematode, spongy moth (formerly known as gypsy moth), witchweed, cogon grass, or other regulated noxious weed or plant pest.

STANDARD SPECIAL PROVISION

TITLE VI AND NONDISCRIMINATION:

(6-28-77)(Rev 1/16/2024) Z-6

The North Carolina Department of Transportation is committed to carrying out the U.S. Department of Transportation's policy of ensuring nondiscrimination in the award and administration of contracts.

The provisions of this section related to United States Department of Transportation (US DOT) Order 1050.2A, Title 49 Code of Federal Regulations (CFR) part 21, 23 United States Code (U.S.C.) 140 and 23 CFR part 200 (or 49 CFR 303, 49 U.S.C. 5332 or 49 U.S.C. 47123) are applicable to all North Carolina Department of Transportation (NCDOT) contracts and to all related subcontracts, material supply, engineering, architectural and other service contracts, regardless of dollar amount. Any Federal provision that is specifically required not specifically set forth is hereby incorporated by reference.

(1) **Title VI Assurances (USDOT Order 1050.2A, Appendix A)**

During the performance of this contract, the contractor, for itself, its assignees, and successors in interest (hereinafter referred to as the "contractor") agrees as follows:

(a) Compliance with Regulations

The contractor (hereinafter includes consultants) shall comply with the Acts and the Regulations relative to Nondiscrimination in Federally-assisted programs of the U.S. Department of Transportation, Federal Highway Administration (FHWA), as they may be amended from time to time, which are herein incorporated by reference and made a part of this contract.

(b) Nondiscrimination

The contractor, with regard to the work performed by it during the contract, shall not discriminate on the grounds of race, color, or national origin in the selection and retention of subcontractors, including procurements of materials and leases of equipment. The contractor shall not participate directly or indirectly in the discrimination prohibited by the Acts and the Regulations, including employment practices when the contract covers any activity, project, or program set forth in Appendix B of 49 CFR Part 21.

(c) Solicitations for Subcontractors, Including Procurements of Materials and Equipment

In all solicitations, either by competitive bidding, or negotiation made by the contractor for work to be performed under a subcontract, including procurements of materials, or leases of equipment, each potential subcontractor or supplier shall be notified by the contractor of the contractor's obligations under this contract and the Acts and the Regulations relative to Nondiscrimination on the grounds of race, color, or national origin.

(d) Information and Reports

The contractor shall provide all information and reports required by the Acts, the Regulations, and directives issued pursuant thereto and shall permit access to its books, records, accounts, other sources of information, and its facilities as may be determined

by the Recipient or the FHWA to be pertinent to ascertain compliance with such Acts, Regulations, and instructions. Where any information required of a contractor is in the exclusive possession of another who fails or refuses to furnish the information, the contractor shall so certify to the Recipient or the FHWA, as appropriate, and shall set forth what efforts it has made to obtain the information.

(e) Sanctions for Noncompliance:

In the event of a contractor's noncompliance with the Non-discrimination provisions of this contract, the Recipient will impose such contract sanctions as it and/or the FHWA may determine to be appropriate, including, but not limited to:

(i) Withholding payments to the contractor under the contract until the contractor complies; and/or

(ii) Cancelling, terminating, or suspending a contract, in whole or in part.

(f) Incorporation of Provisions

The contractor shall include the provisions of paragraphs (a) through (f) in every subcontract, including procurements of materials and leases of equipment, unless exempt by the Acts, the Regulations and directives issued pursuant thereto. The contractor shall take action with respect to any subcontract or procurement as the Recipient or the FHWA may direct as a means of enforcing such provisions including sanctions for noncompliance. Provided, that if the contractor becomes involved in, or is threatened with litigation by a subcontractor, or supplier because of such direction, the contractor may request the Recipient to enter into any litigation to protect the interests of the Recipient. In addition, the contractor may request the United States to enter into the litigation to protect the interests of the United States.

(2) **Title VI Nondiscrimination Program (23 CFR 200.5(p))**

The North Carolina Department of Transportation (NCDOT) has assured the USDOT that, as a condition to receiving federal financial assistance, NCDOT will comply with Title VI of the Civil Rights Act of 1964 and all requirements imposed by Title 49 CFR part 21 and related nondiscrimination authorities to ensure that no person shall, on the ground of race, color, national origin, limited English proficiency, sex, age, or disability (including religion/creed or income-level, where applicable), be excluded from participation in, be denied the benefits of, or be subjected to discrimination under any programs, activities, or services conducted or funded by NCDOT. Contractors and other organizations under contract or agreement with NCDOT must also comply with Title VI and related authorities, therefore:

(a) During the performance of this contract or agreement, contractors (e.g., subcontractors, consultants, vendors, prime contractors) are responsible for complying with NCDOT's Title VI Program. Contractors are not required to prepare or submit Title VI Programs. To comply with this section, the prime contractor shall:

1. Post NCDOT's Notice of Nondiscrimination and the Contractor's own Equal Employment Opportunity (EEO) Policy in conspicuous locations accessible to all employees, applicants and subcontractors on the jobsite.

2. Physically incorporate the required Title VI clauses into all subcontracts on federally-assisted and state-funded NCDOT projects, and ensure inclusion by subcontractors into all lower-tier subcontracts.

3. Required Solicitation Language. The Contractor shall include the following notification in all solicitations for bids and requests for work or material, regardless of funding source:

   "The North Carolina Department of Transportation, in accordance with the provisions of Title VI of the Civil Rights Act of 1964 (78 Stat. 252, 42 US.C. §§ 2000d to 2000d-4) and the Regulations, hereby notifies all bidders that it will affirmatively ensure that any contract entered into pursuant to this advertisement, disadvantaged business enterprises will be afforded full and fair opportunity to submit bids in response to this invitation and will not be discriminated against on the grounds of race, color, or national origin in consideration for an award. In accordance with other related nondiscrimination authorities, bidders and contractors will also not be discriminated against on the grounds of sex, age, disability, low-income level, creed/religion, or limited English proficiency in consideration for an award."

4. Physically incorporate the FHWA-1273, in its entirety, into all subcontracts and subsequent lower tier subcontracts on Federal-aid highway construction contracts only.

5. Provide language assistance services (i.e., written translation and oral interpretation), free of charge, to LEP employees and applicants. Contact NCDOT OCR for further assistance, if needed.

6. For assistance with these Title VI requirements, contact the NCDOT Title VI Nondiscrimination Program at 1-800-522-0453.

(b) Subrecipients (e.g. cities, counties, LGAs, planning organizations) may be required to prepare and submit a Title VI Plan to NCDOT, including Title VI Assurances and/or agreements. Subrecipients must also ensure compliance by their contractors and subrecipients with Title VI. (23 CFR 200.9(b)(7))

(c) If reviewed or investigated by NCDOT, the contractor or subrecipient agrees to take affirmative action to correct any deficiencies found within a reasonable time period, not to exceed 90 calendar days, unless additional time is granted by NCDOT. (23 CFR 200.9(b)(15))

(d) The Contractor is responsible for notifying subcontractors of NCDOT's External Discrimination Complaints Process.

1. Applicability

   Title VI and related laws protect participants and beneficiaries (e.g., members of the public and contractors) from discrimination by NCDOT employees, subrecipients and contractors, regardless of funding source.

2. Eligibility

   Any person—or class of persons—who believes he/she has been subjected to discrimination based on race, color, national origin, Limited English Proficiency (LEP), sex, age, or disability (and religion in the context of employment, aviation, or transit) may file a written complaint. The law also prohibits intimidation or retaliation of any sort.

3. Time Limits and Filing Options

   Complaints may be filed by the affected individual(s) or a representative and must be filed no later than 180 calendar days after the following:

   (i) The date of the alleged act of discrimination; or

   (ii) The date when the person(s) became aware of the alleged discrimination; or

   (iii) Where there has been a continuing course of conduct, the date on which that conduct was discontinued or the latest instance of the conduct.

   Title VI and related discrimination complaints may be submitted to the following entities:

   - North Carolina Department of Transportation, Office of Civil Rights, Title VI Program, 1511 Mail Service Center, Raleigh, NC 27699-1511; toll free 1-800-522-0453
   - Federal Highway Administration, North Carolina Division Office, 310 New Bern Avenue, Suite 410, Raleigh, NC 27601, 919-747-7010
   - US Department of Transportation, Departmental Office of Civil Rights, External Civil Rights Programs Division, 1200 New Jersey Avenue, SE, Washington, DC 20590; 202-366-4070

4. Format for Complaints

   Complaints must be in writing and signed by the complainant(s) or a representative, and include the complainant's name, address, and telephone number. Complaints received by fax or e-mail will be acknowledged and processed. Allegations received by telephone will be reduced to writing and provided to the complainant for confirmation or revision before processing. Complaints will be accepted in other languages, including Braille.

5. Discrimination Complaint Form

   Contact NCDOT Civil Rights to receive a full copy of the Discrimination Complaint Form and procedures.

6. Complaint Basis

   Allegations must be based on issues involving race, color, national origin (LEP), sex, age, disability, or religion (in the context of employment, aviation or transit). "Basis" refers to the complainant's membership in a protected group category.

TABLE 103-1
COMPLAINT BASIS

Protected Categories	Definition	Examples	Applicable Nondiscrimination Authorities
Race and Ethnicity	An individual belonging to one of the accepted racial groups; or the perception, based usually on physical characteristics that a person is a member of a racial group	Black/African American, Hispanic/Latino, Asian, American Indian/Alaska Native, Native Hawaiian/Pacific Islander, White	Title VI of the Civil Rights Act of 1964; 49 CFR Part 21; 23 CFR 200; 49 U.S.C. 5332(b); 49 U.S.C. 47123. *(Executive Order 13166)*
Color	Color of skin, including shade of skin within a racial group	Black, White, brown, yellow, etc.	
National Origin *(Limited English Proficiency)*	Place of birth. Citizenship is not a factor. (*Discrimination based on language or a person's accent is also covered)*	Mexican, Cuban, Japanese, Vietnamese, Chinese	
Sex	Gender. The sex of an individual. *Note:* Sex under this program does not include sexual orientation.	Women and Men	1973 Federal-Aid Highway Act; 49 U.S.C. 5332(b); 49 U.S.C. 47123.
Age	Persons of any age	21-year-old person	Age Discrimination Act of 1975 49 U.S.C. 5332(b); 49 U.S.C. 47123.
Disability	Physical or mental impairment, permanent or temporary, or perceived.	Blind, alcoholic, para-amputee, epileptic, diabetic, arthritic	Section 504 of the Rehabilitation Act of 1973; Americans with Disabilities Act of 1990
Religion (in the context of employment) *(Religion/ Creed in all aspects of any aviation or transit-related construction)*	An individual belonging to a religious group; or the perception, based on distinguishable characteristics that a person is a member of a religious group. In practice, actions taken as a result of the moral and ethical beliefs as to what is right and wrong, which are sincerely held with the strength of traditional religious views. ***Note:*** Does not have to be associated with a recognized religious group or church; if an individual sincerely holds to the belief, it is a protected religious practice.	Muslim, Christian, Sikh, Hindu, etc.	Title VII of the Civil Rights Act of 1964; 23 CFR 230; FHWA-1273 Required Contract Provisions. *(49 U.S.C. 5332(b);* *49 U.S.C. 47123)*

(3) **Pertinent Nondiscrimination Authorities**

During the performance of this contract, the contractor, for itself, its assignees, and successors in interest agrees to comply with the following non-discrimination statutes and authorities, including, but not limited to:

(a) Title VI of the Civil Rights Act of 1964 (42 U.S.C. § 2000d et seq., 78 stat. 252), (prohibits discrimination on the basis of race, color, national origin); and 49 CFR Part 21.

(b) The Uniform Relocation Assistance and Real Property Acquisition Policies Act of 1970, (42 U.S.C. § 4601), (prohibits unfair treatment of persons displaced or whose property has been acquired because of Federal or Federal-aid programs and projects);

(c) Federal-Aid Highway Act of 1973, (23 U.S.C. § 324 et seq.), (prohibits discrimination on the basis of sex);

(d) Section 504 of the Rehabilitation Act of 1973, (29 U.S.C. § 794 et seq.), as amended, (prohibits discrimination on the basis of disability) and 49 CFR Part 27;

(e) The Age Discrimination Act of 1975, as amended, (42 U.S.C. § 6101 et seq.), (prohibits discrimination on the basis of age);

(f) Airport and Airway Improvement Act of 1982, (49 USC § 471, Section 47123), as amended, (prohibits discrimination based on race, creed, color, national origin, or sex);

(g) The Civil Rights Restoration Act of 1987, (PL 100-209), (Broadened the scope, coverage and applicability of Title VI of the Civil Rights Act of 1964, The Age Discrimination Act of 1975 and Section 504 of the Rehabilitation Act of 1973, by expanding the definition of the terms "programs or activities" to include all of the programs or activities of the Federal-aid recipients, sub-recipients and contractors, whether such programs or activities are Federally funded or not);

(h) Titles II and III of the Americans with Disabilities Act, which prohibit discrimination on the basis of disability in the operation of public entities, public and private transportation systems, places of public accommodation, and certain testing entities (42 U.S.C. §§ 12131-12189) as implemented by Department of Transportation regulations at 49 C.F.R. parts 37 and 38;

(i) The Federal Aviation Administration's Nondiscrimination statute (49 U.S.C. § 47123) (prohibits discrimination on the basis of race, color, national origin, and sex);

(j) Executive Order 12898, Federal Actions to Address Environmental Justice in Minority Populations and Low-Income Populations, which ensures Nondiscrimination against minority populations by discouraging programs, policies, and activities with disproportionately high and adverse human health or environmental effects on minority and low-income populations;

(k) Executive Order 13166, Improving Access to Services for Persons with Limited English Proficiency, and resulting agency guidance, national origin discrimination includes discrimination because of Limited English proficiency (LEP). To ensure compliance with Title VI, you must take reasonable steps to ensure that LEP persons have meaningful access to your programs (70 Fed. Reg. at 74087 to 74100);

(l) Title IX of the Education Amendments of 1972, as amended, which prohibits you from discriminating because of sex in education programs or activities (20 U.S.C. 1681 et seq).

(m) Title VII of the Civil Rights Act of 1964 (42 U.S.C. § 2000e et seq., Pub. L. 88-352), (prohibits employment discrimination on the basis of race, color, religion, sex, or national origin).

(4) **Additional Title VI Assurances**

***The following Title VI Assurances (Appendices B, C and D) shall apply, as applicable*

(a) Clauses for Deeds Transferring United States Property (1050.2A, Appendix B)

The following clauses will be included in deeds effecting or recording the transfer of real property, structures, or improvements thereon, or granting interest therein from the United States pursuant to the provisions of Assurance 4.

NOW, THEREFORE, the U.S. Department of Transportation as authorized by law and upon the condition that the North Carolina Department of Transportation (NCDOT) will accept title to the lands and maintain the project constructed thereon in accordance with the North Carolina General Assembly, the Regulations for the Administration of the Federal-Aid Highway Program, and the policies and procedures prescribed by the Federal Highway Administration of the U.S. Department of Transportation in accordance and in compliance with all requirements imposed by Title 49, Code of Federal Regulations, U.S. Department of Transportation, Subtitle A, Office of the Secretary, Part 21, Nondiscrimination in Federally-assisted programs of the U.S Department of Transportation pertaining to and effectuating the provisions of Title VI of the Civil Rights Act of 1964 (78 Stat. 252; 42 U.S.C. § 2000d to 2000d-4), does hereby remise, release, quitclaim and convey unto the NCDOT all the right, title and interest of the U.S. Department of Transportation in and to said lands described in Exhibit A attached hereto and made a part hereof.

(HABENDUM CLAUSE)

TO HAVE AND TO HOLD said lands and interests therein unto the North Carolina Department of Transportation (NCDOT) and its successors forever, subject, however, to the covenants, conditions, restrictions and reservations herein contained as follows, which will remain in effect for the period during which the real property or structures are used for a purpose for which Federal financial assistance is extended or for another purpose involving the provision of similar services or benefits and will be binding on the NCDOT, its successors and assigns.

The NCDOT, in consideration of the conveyance of said lands and interests in lands, does hereby covenant and agree as a covenant running with the land for itself, its successors and assigns, that (1) no person will on the grounds of race, color, or national origin, be excluded from participation in, be denied the benefits of, or be otherwise subjected to discrimination with regard to any facility located wholly or in part on, over, or under such lands hereby conveyed [,] [and]* (2) that the NCDOT will use the lands and interests in lands and interests in lands so conveyed, in compliance with all requirements imposed by or pursuant to Title 49, Code of Federal Regulations, U.S. Department of Transportation, Subtitle A, Office of the Secretary, Part 21, Non-discrimination in Federally-assisted programs of the U.S. Department of Transportation, Effectuation of Title VI of the Civil Rights Act of 1964, and as said Regulations and Acts may be amended [, and (3) that in the event of breach of any of the above-mentioned nondiscrimination conditions, the Department will have a right to enter or re-enter said lands and facilities on said land, and that above described land and facilities will thereon revert to and vest in and become the absolute property of the U.S. Department of Transportation and its assigns as such interest existed prior to this instruction].*

(*Reverter clause and related language to be used only when it is determined that such a clause is necessary in order to make clear the purpose of Title VI.)

(b) Clauses for Transfer of Real Property Acquired or Improved Under the Activity, Facility, or Program (1050.2A, Appendix C)

The following clauses will be included in deeds, licenses, leases, permits, or similar instruments entered into by the North Carolina Department of Transportation (NCDOT) pursuant to the provisions of Assurance 7(a):

1. The (grantee, lessee, permittee, etc. as appropriate) for himself/herself, his/her heirs, personal representatives, successors in interest, and assigns, as a part of the consideration hereof, does hereby covenant and agree [in the case of deeds and leases add "as a covenant running with the land"] that:

   (i.) In the event facilities are constructed, maintained, or otherwise operated on the property described in this (deed, license, lease, permit, etc.) for a purpose for which a U.S. Department of Transportation activity, facility, or program is extended or for another purpose involving the provision of similar services or benefits, the (grantee, licensee, lessee, permittee, etc.) will maintain and operate such facilities and services in compliance with all requirements imposed by the Acts and Regulations (as may be amended) such that no person on the grounds of race, color, or national origin, will be excluded from participation in, denied the benefits of, or be otherwise subjected to discrimination in the use of said facilities.

2. With respect to licenses, leases, permits, etc., in the event of breach of any of the above Nondiscrimination covenants, the NCDOT will have the right to terminate the (lease, license, permit, etc.) and to enter, re-enter, and repossess said lands and facilities thereon, and hold the same as if the (lease, license, permit, etc.) had never been made or issued. *

3. With respect to a deed, in the event of breach of any of the above Nondiscrimination covenants, the NCDOT will have the right to enter or re-enter the lands and facilities thereon, and the above described lands and facilities will there upon revert to and vest in and become the absolute property of the NCDOT and its assigns. *

(*Reverter clause and related language to be used only when it is determined that such a clause is necessary to make clear the purpose of Title VI.)

(c) Clauses for Construction/Use/Access to Real Property Acquired Under the Activity, Facility or Program (1050.2A, Appendix D)

The following clauses will be included in deeds, licenses, permits, or similar instruments/ agreements entered into by the North Carolina Department of Transportation (NCDOT) pursuant to the provisions of Assurance 7(b):

1. The (grantee, licensee, permittee, etc., as appropriate) for himself/herself, his/her heirs, personal representatives, successors in interest, and assigns, as a part of the consideration hereof, does hereby covenant and agree (in the case of deeds and leases add, "as a covenant running with the land") that (1) no person on the ground of race, color, or national origin, will be excluded from participation in, denied the benefits of, or be otherwise subjected to discrimination in the use of said facilities, (2) that in the construction of any improvements on, over, or under such land, and the furnishing of services thereon, no person on the ground of race, color, or national origin, will be excluded from participation in, denied the benefits of, or otherwise be subjected to discrimination, (3) that the (grantee, licensee, lessee, permittee, etc.) will use the premises in compliance with all other requirements imposed by or pursuant to the Acts and Regulations, as amended, set forth in this Assurance.
2. With respect to (licenses, leases, permits, etc.), in the event of breach of any of the above Non¬ discrimination covenants, the NCDOT will have the right to terminate the (license, permit, etc., as appropriate) and to enter or re-enter and repossess said land and the facilities thereon, and hold the same as if said (license, permit, etc., as appropriate) had never been made or issued. *
3. With respect to deeds, in the event of breach of any of the above Nondiscrimination covenants, the NCDOT will there upon revert to and vest in and become the absolute property of the NCDOT and its assigns. *

(*Reverter clause and related language to be used only when it is determined that such a clause is necessary to make clear the purpose of Title VI.)

FHWA-1273 -- Revised June 25, 2026

CONTRACT PROVISIONS FOR FEDERAL-AID CONSTRUCTION CONTRACTS

I. General
II. Nondiscrimination
III. Davis-Bacon and Related Act Provisions
IV. Contract Work Hours and Safety Standards Act Provisions
V. Subletting or Assigning the Contract
VI. Safety: Accident Prevention
VII. False Statements Concerning Highway Projects
VIII. Implementation of Clean Air Act and Federal Water Pollution Control Act
IX. Certification Regarding Debarment, Suspension, Ineligibility and Voluntary Exclusion
X. Certification Regarding Use of Contract Funds for Lobbying
XI. Use of United States-Flag Vessels:

ATTACHMENTS

A. Employment and Materials Preference for Appalachian Development Highway System or Appalachian Local Access Road Contracts (included in Appalachian contracts only).

I. GENERAL

1. Historically, contracting agencies using Federal-aid highway funds were required to ensure Form FHWA-1273 was physically incorporated into all contracts and subcontracts. Effective June 10, 2026, this requirement was eliminated [91 FR 25492]. Future use of Form FHWA-1273 is now optional on the part of the contracting agency using Federal-aid highway funds. FHWA continues to make Form FHWA-1273 available as a convenience to contracting agencies. Contracting agencies must continue to ensure compliance with the provisions cited in Form FHWA-1273 in accordance with the provisions regardless of the use of Form FHWA-1273. Accordingly, the contracting agency retains the authority to determine whether the contractor must use Form FHWA-1273 to physically incorporate required contract provisions in each subcontract and in lower tier contracts. Where permitted by the contracting agency, the contractor may choose other ways to include required contract provisions in each subcontract, besides incorporating Form FHWA-1273. Contract provisions in Form FHWA-1273 are not required to be physically included in subcontracts for design services on Federal-aid design-build contracts, or in purchase orders, rental agreements and other agreements for supplies or services.

The applicable requirements of Form FHWA-1273 are incorporated by reference for work done under any purchase order, rental agreement or agreement for other services. The prime contractor or design-builder shall be responsible for compliance by any subcontractor, lower-tier subcontractor or service provider.

Contracting agencies may reference Form FHWA-1273 in solicitation-for-bids or request-for-proposals documents.

2. Subject to the applicability criteria noted in the following sections, these contract provisions shall apply to all work performed on the contract by the contractor's own organization and with the assistance of workers under the contractor's immediate superintendence and to all work performed on the contract by piecework, station work, or by subcontract.

3. A breach of any of the stipulations contained in these Required Contract Provisions may be sufficient grounds for withholding of progress payments, withholding of final payment, termination of the contract, suspension / debarment or any other action determined to be appropriate by the contracting agency and FHWA.

4. Selection of Labor: During the performance of this contract, the contractor shall not use convict labor for any purpose within the limits of a construction project on a Federal-aid highway unless it is labor performed by convicts who are on parole, supervised release, or probation. 23 U.S.C. 114(b). The term Federal-aid highway does not include roadways functionally classified as local roads or rural minor collectors. 23 U.S.C. 101(a).

II. NONDISCRIMINATION

The contractor and all subcontractors must comply with the following policies: 29 CFR Parts 1625-1627, 23 U.S.C. 140, Section 504 of the Rehabilitation Act of 1973, as amended (29 U.S.C. 794), Title VI of the Civil Rights Act of 1964, as amended (42 U.S.C. 2000d et seq.), and related regulations including 49 CFR Parts 21, 26, and 27, including any amendments thereto.

Note: The U.S. Department of Labor has exclusive authority to determine compliance with 29 CFR Parts 1625-1627. The contracting agency and the FHWA have the authority and the responsibility to ensure compliance with 23 U.S.C. 140, Section 504 of the Rehabilitation Act of 1973, as amended (29 U.S.C. 794), and Title VI of the Civil Rights Act of 1964, as amended (42 U.S.C. 2000d et seq.), and related regulations including 49 CFR Parts 21, 26, and 27, including any amendments thereto.

The provisions of the Americans with Disabilities Act of 1990 (42 U.S.C. 12101 et seq.) set forth under 28 CFR Part 35 and 29 CFR Part 1630 are incorporated by reference in this contract.

1. Assurances Required:

a. The requirements of 49 CFR Part 26, including any amendments thereto, and the State DOT's FHWA-approved Disadvantaged Business Enterprise (DBE) program are incorporated by reference.

b. The contractor, subrecipient or subcontractor shall not discriminate on the basis of race, color, national origin, or sex in the performance of this contract. The contractor shall carry out applicable requirements of 49 CFR part 26, including any amendments thereto, in the award and administration of DOT-assisted contracts. Failure by the contractor to carry out these requirements is a material breach of this contract, which may result in the termination of this contract or such other remedy as the recipient deems appropriate, which may include, but is not limited to:

(1) Withholding monthly progress payments;
(2) Assessing sanctions;
(3) Liquidated damages; and/or
(4) Disqualifying the contractor from future bidding as non-responsible.

c. The Title VI and nondiscrimination provisions of U.S. DOT Order 1050.2A at Appendixes A and E, including any amendments thereto, are incorporated by reference. 49 CFR Part 21.

III. DAVIS-BACON AND RELATED ACT PROVISIONS

This section is applicable to all Federal-aid construction projects exceeding $2,000 and to all related subcontracts and lower-tier subcontracts (regardless of subcontract size), in accordance with 29 CFR 5.5. The requirements apply to all projects located within the right-of-way of a roadway that is functionally classified as Federal-aid highway. 23 U.S.C. 113. This excludes roadways functionally classified as local roads or rural minor collectors, which are exempt. 23 U.S.C. 101. Where applicable law requires that projects be treated as a project on a Federal-aid highway, the provisions of this subpart will apply regardless of the location of the project. Examples include: Surface Transportation Block Grant Program projects funded under 23 U.S.C. 133 [excluding recreational trails projects], the Nationally Significant Freight and Highway Projects funded under 23 U.S.C. 117, and National Highway Freight Program projects funded under 23 U.S.C. 167.

The following provisions are from the U.S. Department of Labor regulations in 29 CFR 5.5 “Contract provisions and related matters” with minor revisions to conform to the FHWA-1273 format and FHWA program requirements.

1. Minimum wages (29 CFR 5.5)

a. *Wage rates and fringe benefits*. All laborers and mechanics employed or working upon the site of the work (or otherwise working in construction or development of the project under a development statute), will be paid unconditionally and not less often than once a week, and without subsequent deduction or rebate on any account (except such payroll deductions as are permitted by regulations issued by the Secretary of Labor under the Copeland Act (29 CFR part 3)), the full amount of basic hourly wages and bona fide fringe benefits (or cash equivalents thereof) due at time of payment computed at rates not less than those contained in the wage determination of the Secretary of Labor which is attached hereto and made a part hereof, regardless of any contractual relationship which may be alleged to exist between the contractor and such laborers and mechanics. As provided in paragraphs (d) and (e) of 29 CFR 5.5, the appropriate wage determinations are effective by operation of law even if they have not been attached to the contract. Contributions made or costs reasonably anticipated for bona fide fringe benefits under the Davis-Bacon Act (40 U.S.C. 3141(2)(B)) on behalf of laborers or mechanics are considered wages paid to such laborers or mechanics, subject to the provisions of paragraph 1.e. of this section; also, regular contributions made or costs incurred for more than a weekly period (but not less often than quarterly) under plans, funds, or programs which cover the particular weekly period, are deemed to be constructively made or incurred during such weekly period. Such laborers and mechanics must be paid the appropriate wage rate and fringe benefits on the wage determination for the classification(s) of work actually performed, without regard to skill, except as provided in paragraph 4. of this section. Laborers or mechanics performing work in more than one classification may be compensated at the rate specified for each classification for the time actually worked therein: *Provided,* That the employer's payroll records accurately set forth the time spent in each classification in which work is performed. The wage determination (including any additional classifications and wage rates conformed under paragraph 1.c. of this section) and the Davis-Bacon poster (WH–1321) must be posted at all times by the contractor and its subcontractors at the site of the work in a prominent and accessible place where it can be easily seen by the workers.

b. *Frequently recurring classifications.* (1) In addition to wage and fringe benefit rates that have been determined to be prevailing under the procedures set forth in 29 CFR part 1, a wage determination may contain, pursuant to § 1.3(f), wage and fringe benefit rates for classifications of laborers and mechanics for which conformance requests are regularly submitted pursuant to paragraph 1.c. of this section, provided that:

(i) The work performed by the classification is not performed by a classification in the wage determination for which a prevailing wage rate has been determined;

(ii) The classification is used in the area by the construction industry; and

(iii) The wage rate for the classification bears a reasonable relationship to the prevailing wage rates contained in the wage determination.

(2) The Administrator will establish wage rates for such classifications in accordance with paragraph 1.c.(1)(iii) of this section. Work performed in such a classification must be paid at no less than the wage and fringe benefit rate listed on the wage determination for such classification.

c. *Conformance*. (1) The contracting officer must require that any class of laborers or mechanics, including helpers, which is not listed in the wage determination and which is to be employed under the contract be classified in conformance with the wage determination. Conformance of an additional classification and wage rate and fringe benefits is appropriate only when the following criteria have been met:

(i) The work to be performed by the classification requested is not performed by a classification in the wage determination; and

(ii) The classification is used in the area by the construction industry; and

(iii) The proposed wage rate, including any bona fide fringe benefits, bears a reasonable relationship to the wage rates contained in the wage determination.

(2) The conformance process may not be used to split, subdivide, or otherwise avoid application of classifications listed in the wage determination.

(3) If the contractor and the laborers and mechanics to be employed in the classification (if known), or their representatives, and the contracting officer agree on the

classification and wage rate (including the amount designated for fringe benefits where appropriate), a report of the action taken will be sent by the contracting officer by email to *DBAconformance@dol.gov*. The Administrator, or an authorized representative, will approve, modify, or disapprove every additional classification action within 30 days of receipt and so advise the contracting officer or will notify the contracting officer within the 30–day period that additional time is necessary.

(4) In the event the contractor, the laborers or mechanics to be employed in the classification or their representatives, and the contracting officer do not agree on the proposed classification and wage rate (including the amount designated for fringe benefits, where appropriate), the contracting officer will, by email to *DBAconformance@dol.gov,* refer the questions, including the views of all interested parties and the recommendation of the contracting officer, to the Administrator for determination. The Administrator, or an authorized representative, will issue a determination within 30 days of receipt and so advise the contracting officer or will notify the contracting officer within the 30–day period that additional time is necessary.

(5) The contracting officer must promptly notify the contractor of the action taken by the Wage and Hour Division under paragraphs 1.c.(3) and (4) of this section. The contractor must furnish a written copy of such determination to each affected worker or it must be posted as a part of the wage determination. The wage rate (including fringe benefits where appropriate) determined pursuant to paragraph 1.c.(3) or (4) of this section must be paid to all workers performing work in the classification under this contract from the first day on which work is performed in the classification.

d. *Fringe benefits not expressed as an hourly rate.* Whenever the minimum wage rate prescribed in the contract for a class of laborers or mechanics includes a fringe benefit which is not expressed as an hourly rate, the contractor may either pay the benefit as stated in the wage determination or may pay another bona fide fringe benefit or an hourly cash equivalent thereof.

e. *Unfunded plans.* If the contractor does not make payments to a trustee or other third person, the contractor may consider as part of the wages of any laborer or mechanic the amount of any costs reasonably anticipated in providing bona fide fringe benefits under a plan or program, *Provided,* That the Secretary of Labor has found, upon the written request of the contractor, in accordance with the criteria set forth in § 5.28, that the applicable standards of the Davis-Bacon Act have been met. The Secretary of Labor may require the contractor to set aside in a separate account assets for the meeting of obligations under the plan or program.

f. *Interest.* In the event of a failure to pay all or part of the wages required by the contract, the contractor will be required to pay interest on any underpayment of wages.

2. Withholding (29 CFR 5.5)

a. *Withholding requirements.* The contracting agency may, upon its own action, or must, upon written request of an authorized representative of the Department of Labor, withhold or cause to be withheld from the contractor so much of the accrued payments or advances as may be considered necessary to satisfy the liabilities of the prime contractor or any subcontractor for the full amount of wages and monetary relief, including interest, required by the clauses set forth in this section for violations of this contract, or to satisfy any such liabilities required by any other Federal contract, or federally assisted contract subject to Davis-Bacon labor standards, that is held by the same prime contractor (as defined in § 5.2). The necessary funds may be withheld from the contractor under this contract, any other Federal contract with the same prime contractor, or any other federally assisted contract that is subject to Davis-Bacon labor standards requirements and is held by the same prime contractor, regardless of whether the other contract was awarded or assisted by the same agency, and such funds may be used to satisfy the contractor liability for which the funds were withheld. In the event of a contractor's failure to pay any laborer or mechanic, including any apprentice or helper working on the site of the work all or part of the wages required by the contract, or upon the contractor's failure to submit the required records as discussed in paragraph 3.d. of this section, the contracting agency may on its own initiative and after written notice to the contractor, take such action as may be necessary to cause the suspension of any further payment, advance, or guarantee of funds until such violations have ceased.

b. Priority to withheld funds. The Department has priority to funds withheld or to be withheld in accordance with paragraph 2.a. of this section or Section IV, paragraph 3.a., or both, over claims to those funds by:

(1) A contractor's surety(ies), including without limitation performance bond sureties and payment bond sureties;

(2) A contracting agency for its reprocurement costs;

(3) A trustee(s) (either a court-appointed trustee or a U.S. trustee, or both) in bankruptcy of a contractor, or a contractor's bankruptcy estate;

(4) A contractor's assignee(s);

(5) A contractor's successor(s); or

(6) A claim asserted under the Prompt Payment Act, 31 U.S.C. 3901–3907.

3. Records and certified payrolls (29 CFR 5.5)

a. *Basic record requirements* (1) *Length of record retention.* All regular payrolls and other basic records must be maintained by the contractor and any subcontractor during the course of the work and preserved for all laborers and mechanics working at the site of the work (or otherwise working in construction or development of the project under a development statute) for a period of at least 3 years after all the work on the prime contract is completed.

(2) *Information required.* Such records must contain the name; Social Security number; last known address, telephone number, and email address of each such worker; each worker's correct classification(s) of work actually performed; hourly rates of wages paid (including rates of contributions or costs anticipated for bona fide fringe benefits or cash equivalents thereof of the types described in 40 U.S.C. 3141(2)(B) of the Davis-Bacon Act); daily and weekly number

of hours actually worked in total and on each covered contract; deductions made; and actual wages paid.

(3) *Additional records relating to fringe benefits.* Whenever the Secretary of Labor has found under paragraph 1.e. of this section that the wages of any laborer or mechanic include the amount of any costs reasonably anticipated in providing benefits under a plan or program described in 40 U.S.C. 3141(2)(B) of the Davis-Bacon Act, the contractor must maintain records which show that the commitment to provide such benefits is enforceable, that the plan or program is financially responsible, and that the plan or program has been communicated in writing to the laborers or mechanics affected, and records which show the costs anticipated or the actual cost incurred in providing such benefits.

(4) *Additional records relating to apprenticeship.* Contractors with apprentices working under approved programs must maintain written evidence of the registration of apprenticeship programs, the registration of the apprentices, and the ratios and wage rates prescribed in the applicable programs.

b. *Certified payroll requirements* (1) *Frequency and method of submission.* The contractor or subcontractor must submit weekly, for each week in which any DBA- or Related Acts-covered work is performed, certified payrolls to the contracting agency. The prime contractor is responsible for the submission of all certified payrolls by all subcontractors. A contracting agency or prime contractor may permit or require contractors to submit certified payrolls through an electronic system, as long as the electronic system requires a legally valid electronic signature; the system allows the contractor, the contracting agency, and the Department of Labor to access the certified payrolls upon request for at least 3 years after the work on the prime contract has been completed; and the contracting agency or prime contractor permits other methods of submission in situations where the contractor is unable or limited in its ability to use or access the electronic system.

(2) *Information required.* The certified payrolls submitted must set out accurately and completely all of the information required to be maintained under paragraph 3.a.(2) of this section, except that full Social Security numbers and last known addresses, telephone numbers, and email addresses must not be included on weekly transmittals. Instead, the certified payrolls need only include an individually identifying number for each worker (*e.g.,* the last four digits of the worker's Social Security number). The required weekly certified payroll information may be submitted using Optional Form WH–347 or in any other format desired. Optional Form WH–347 is available for this purpose from the Wage and Hour Division website at *https://www.dol.gov/sites/dolgov/files/WHD/legacy/files/wh347/.pdf* or its successor website. It is not a violation of this section for a prime contractor to require a subcontractor to provide full Social Security numbers and last known addresses, telephone numbers, and email addresses to the prime contractor for its own records, without weekly submission by the subcontractor to the contracting agency.

(3) *Statement of Compliance.* Each certified payroll submitted must be accompanied by a "Statement of Compliance," signed by the contractor or subcontractor, or the contractor's or subcontractor's agent who pays or supervises the payment of the persons working on the contract, and must certify the following:

(i) That the certified payroll for the payroll period contains the information required to be provided under paragraph 3.b. of this section, the appropriate information and basic records are being maintained under paragraph 3.a. of this section, and such information and records are correct and complete;

(ii) That each laborer or mechanic (including each helper and apprentice) working on the contract during the payroll period has been paid the full weekly wages earned, without rebate, either directly or indirectly, and that no deductions have been made either directly or indirectly from the full wages earned, other than permissible deductions as set forth in 29 CFR part 3; and

(iii) That each laborer or mechanic has been paid not less than the applicable wage rates and fringe benefits or cash equivalents for the classification(s) of work actually performed, as specified in the applicable wage determination incorporated into the contract.

(4) *Use of Optional Form WH–347.* The weekly submission of a properly executed certification set forth on the reverse side of Optional Form WH–347 will satisfy the requirement for submission of the "Statement of Compliance" required by paragraph 3.b.(3) of this section.

(5) *Signature.* The signature by the contractor, subcontractor, or the contractor's or subcontractor's agent must be an original handwritten signature or a legally valid electronic signature.

(6) *Falsification.* The falsification of any of the above certifications may subject the contractor or subcontractor to civil or criminal prosecution under 18 U.S.C. 1001 and 31 U.S.C. 3729.

(7) *Length of certified payroll retention.* The contractor or subcontractor must preserve all certified payrolls during the course of the work and for a period of 3 years after all the work on the prime contract is completed.

c. *Contracts, subcontracts, and related documents.* The contractor or subcontractor must maintain this contract or subcontract and related documents including, without limitation, bids, proposals, amendments, modifications, and extensions. The contractor or subcontractor must preserve these contracts, subcontracts, and related documents during the course of the work and for a period of 3 years after all the work on the prime contract is completed.

d. *Required disclosures and access* (1) *Required record disclosures and access to workers.* The contractor or subcontractor must make the records required under paragraphs 3.a. through 3.c. of this section, and any other documents that the contracting agency, the State DOT, the FHWA, or the Department of Labor deems necessary to determine compliance with the labor standards provisions of any of the applicable statutes referenced by § 5.1, available for inspection, copying, or transcription by authorized representatives of the contracting agency, the State DOT, the FHWA, or the Department of Labor, and must permit such representatives to interview workers during working hours on the job.

(2) *Sanctions for non-compliance with records and worker access requirements.* If the contractor or subcontractor fails to submit the required records or to make them available, or refuses to permit worker interviews during working hours on the job, the Federal agency may, after written notice to the contractor, sponsor, applicant, owner, or other entity, as the case may be, that maintains such records or that employs such workers, take such action as may be necessary to cause the suspension of any further payment, advance, or guarantee of funds. Furthermore, failure to submit the required records upon request or to make such records available, or to permit worker interviews during working hours on the job, may be grounds for debarment action pursuant to § 5.12. In addition, any contractor or other person that fails to submit the required records or make those records available to WHD within the time WHD requests that the records be produced will be precluded from introducing as evidence in an administrative proceeding under 29 CFR part 6 any of the required records that were not provided or made available to WHD. WHD will take into consideration a reasonable request from the contractor or person for an extension of the time for submission of records. WHD will determine the reasonableness of the request and may consider, among other things, the location of the records and the volume of production.

(3) *Required information disclosures.* Contractors and subcontractors must maintain the full Social Security number and last known address, telephone number, and email address of each covered worker, and must provide them upon request to the contracting agency, the State DOT, the FHWA, the contractor, or the Wage and Hour Division of the Department of Labor for purposes of an investigation or other compliance action.

4. Apprentices and equal employment opportunity (29 CFR 5.5)

a. *Apprentices* (1) *Rate of pay.* Apprentices will be permitted to work at less than the predetermined rate for the work they perform when they are employed pursuant to and individually registered in a bona fide apprenticeship program registered with the U.S. Department of Labor, Employment and Training Administration, Office of Apprenticeship (OA), or with a State Apprenticeship Agency recognized by the OA. A person who is not individually registered in the program, but who has been certified by the OA or a State Apprenticeship Agency (where appropriate) to be eligible for probationary employment as an apprentice, will be permitted to work at less than the predetermined rate for the work they perform in the first 90 days of probationary employment as an apprentice in such a program. In the event the OA or a State Apprenticeship Agency recognized by the OA withdraws approval of an apprenticeship program, the contractor will no longer be permitted to use apprentices at less than the applicable predetermined rate for the work performed until an acceptable program is approved.

(2) *Fringe benefits.* Apprentices must be paid fringe benefits in accordance with the provisions of the apprenticeship program. If the apprenticeship program does not specify fringe benefits, apprentices must be paid the full amount of fringe benefits listed on the wage determination for the applicable classification. If the Administrator determines that a different practice prevails for the applicable apprentice classification, fringe benefits must be paid in accordance with that determination.

(3) *Apprenticeship ratio.* The allowable ratio of apprentices to journeyworkers on the job site in any craft classification must not be greater than the ratio permitted to the contractor as to the entire work force under the registered program or the ratio applicable to the locality of the project pursuant to paragraph 4.a.(4) of this section. Any worker listed on a payroll at an apprentice wage rate, who is not registered or otherwise employed as stated in paragraph 4.a.(1) of this section, must be paid not less than the applicable wage rate on the wage determination for the classification of work actually performed. In addition, any apprentice performing work on the job site in excess of the ratio permitted under this section must be paid not less than the applicable wage rate on the wage determination for the work actually performed.

(4) *Reciprocity of ratios and wage rates.* Where a contractor is performing construction on a project in a locality other than the locality in which its program is registered, the ratios and wage rates (expressed in percentages of the journeyworker's hourly rate) applicable within the locality in which the construction is being performed must be observed. If there is no applicable ratio or wage rate for the locality of the project, the ratio and wage rate specified in the contractor's registered program must be observed.

b. *Equal employment opportunity.* The use of apprentices and journeyworkers under this part must be in conformity with 29 CFR part 30, including any amendments thereto.

c. Apprentices and Trainees (programs of the U.S. DOT).

Apprentices and trainees working under apprenticeship and skill training programs which have been certified by the Secretary of Transportation as promoting EEO in connection with Federal-aid highway construction programs are not subject to the requirements of paragraph 4 of this Section III. 23 CFR 230.111(e)(2). The straight time hourly wage rates for apprentices and trainees under such programs will be established by the particular programs. The ratio of apprentices and trainees to journeyworkers shall not be greater than permitted by the terms of the particular program.

5. Compliance with Copeland Act requirements. The contractor shall comply with the requirements of 29 CFR part 3, which are incorporated by reference in this contract as provided in 29 CFR 5.5.

6. Subcontracts. The contractor or subcontractor must insert in any subcontracts the clauses set forth in paragraphs (1) through (11) of this section, along with the applicable wage determination(s) and such other clauses or contract modifications as the contracting agency may by appropriate instructions require, and a clause requiring the subcontractors to include these clauses and wage determination(s) in any lower tier subcontracts. The prime contractor is responsible for the compliance by any subcontractor or lower tier subcontractor with all the contract clauses in this section. In the event of any violations of these clauses, the prime contractor and any subcontractor(s) responsible will be liable for any unpaid wages and monetary relief, including interest from the date of the underpayment or loss, due to any workers of lower-tier subcontractors, and may be subject to debarment, as appropriate. 29 CFR 5.5.

7. **Contract termination: debarment.** A breach of the contract clauses in 29 CFR 5.5 may be grounds for termination of the

contract, and for debarment as a contractor and a subcontractor as provided in 29 CFR 5.12.

8. Compliance with Davis-Bacon and Related Act requirements. All rulings and interpretations of the Davis-Bacon and Related Acts contained in 29 CFR parts 1, 3, and 5 are herein incorporated by reference in this contract as provided in 29 CFR 5.5.

9. Disputes concerning labor standards. As provided in 29 CFR 5.5, disputes arising out of the labor standards provisions of this contract shall not be subject to the general disputes clause of this contract. Such disputes shall be resolved in accordance with the procedures of the Department of Labor set forth in 29 CFR parts 5, 6, and 7. Disputes within the meaning of this clause include disputes between the contractor (or any of its subcontractors) and the contracting agency, the U.S. Department of Labor, or the employees or their representatives.

10. Certification of eligibility. a. By entering into this contract, the contractor certifies that neither it nor any person or firm who has an interest in the contractor's firm is a person or firm ineligible to be awarded Government contracts by virtue of 40 U.S.C. 3144(b) or § 5.12(a).

b. No part of this contract shall be subcontracted to any person or firm ineligible for award of a Government contract by virtue of 40 U.S.C. 3144(b) or § 5.12(a).

c. The penalty for making false statements is prescribed in the U.S. Code, Title 18 Crimes and Criminal Procedure, 18 U.S.C. 1001.

11. Anti-retaliation. It is unlawful for any person to discharge, demote, intimidate, threaten, restrain, coerce, blacklist, harass, or in any other manner discriminate against, or to cause any person to discharge, demote, intimidate, threaten, restrain, coerce, blacklist, harass, or in any other manner discriminate against, any worker or job applicant for:

a. Notifying any contractor of any conduct which the worker reasonably believes constitutes a violation of the DBA, Related Acts, this part, or 29 CFR part 1 or 3;

b. Filing any complaint, initiating or causing to be initiated any proceeding, or otherwise asserting or seeking to assert on behalf of themselves or others any right or protection under the DBA, Related Acts, this part, or 29 CFR part 1 or 3;

c. Cooperating in any investigation or other compliance action, or testifying in any proceeding under the DBA, Related Acts, this part, or 29 CFR part 1 or 3; or

d. Informing any other person about their rights under the DBA, Related Acts, this part, or 29 CFR part 1 or 3.

IV. CONTRACT WORK HOURS AND SAFETY STANDARDS ACT

Pursuant to 29 CFR 5.5(b), the following clauses apply to any Federal-aid construction contract in an amount in excess of $100,000 and subject to the overtime provisions of the Contract Work Hours and Safety Standards Act. These clauses shall be inserted in addition to the clauses required by 29 CFR 5.5(a) or 29 CFR 4.6. As used in this paragraph, the terms laborers and mechanics include watchpersons and guards.

1. Overtime requirements. No contractor or subcontractor contracting for any part of the contract work which may require or involve the employment of laborers or mechanics shall require or permit any such laborer or mechanic in any workweek in which he or she is employed on such work to work in excess of forty hours in such workweek unless such laborer or mechanic receives compensation at a rate not less than one and one-half times the basic rate of pay for all hours worked in excess of forty hours in such workweek. 29 CFR 5.5.

2. Violation; liability for unpaid wages; liquidated damages. In the event of any violation of the clause set forth in paragraph 1. of this section the contractor and any subcontractor responsible therefor shall be liable for the unpaid wages and interest from the date of the underpayment. In addition, such contractor and subcontractor shall be liable to the United States (in the case of work done under contract for the District of Columbia or a territory, to such District or to such territory), for liquidated damages. Such liquidated damages shall be computed with respect to each individual laborer or mechanic, including watchpersons and guards, employed in violation of the clause set forth in paragraph 1. of this section, in the sum currently provided in 29 CFR 5.5(b)(2)* for each calendar day on which such individual was required or permitted to work in excess of the standard workweek of forty hours without payment of the overtime wages required by the clause set forth in paragraph 1. of this section.

* $33 as of January 15, 2025 (See 90 FR 1859) as may be adjusted annually by the Department of Labor, pursuant to the Federal Civil Penalties Inflation Adjustment Act of 1990.

3. Withholding for unpaid wages and liquidated damages

a. *Withholding process.* The FHWA or the contracting agency may, upon its own action, or must, upon written request of an authorized representative of the Department of Labor, withhold or cause to be withheld from the contractor so much of the accrued payments or advances as may be considered necessary to satisfy the liabilities of the prime contractor or any subcontractor for any unpaid wages; monetary relief, including interest; and liquidated damages required by the clauses set forth in this section on this contract, any other Federal contract with the same prime contractor, or any other federally assisted contract subject to the Contract Work Hours and Safety Standards Act that is held by the same prime contractor (as defined in § 5.2). The necessary funds may be withheld from the contractor under this contract, any other Federal contract with the same prime contractor, or any other federally assisted contract that is subject to the Contract Work Hours and Safety Standards Act and is held by the same prime contractor, regardless of whether the other contract was awarded or assisted by the same agency, and such funds may be used to satisfy the contractor liability for which the funds were withheld.

b. *Priority to withheld funds.* The Department has priority to funds withheld or to be withheld in accordance with Section III paragraph 2.a. or paragraph 3.a. of this section, or both, over claims to those funds by:

(1) A contractor's surety(ies), including without limitation performance bond sureties and payment bond sureties;

(2) A contracting agency for its reprocurement costs;

(3) A trustee(s) (either a court-appointed trustee or a U.S. trustee, or both) in bankruptcy of a contractor, or a contractor's bankruptcy estate;

(4) A contractor's assignee(s);

(5) A contractor's successor(s); or

(6) A claim asserted under the Prompt Payment Act, 31 U.S.C. 3901–3907.

4. Subcontracts. The contractor or subcontractor must insert in any subcontracts the clauses set forth in paragraphs 1. through 5. of this section and a clause requiring the subcontractors to include these clauses in any lower tier subcontracts. The prime contractor is responsible for compliance by any subcontractor or lower tier subcontractor with the clauses set forth in paragraphs 1. through 5. In the event of any violations of these clauses, the prime contractor and any subcontractor(s) responsible will be liable for any unpaid wages and monetary relief, including interest from the date of the underpayment or loss, due to any workers of lower-tier subcontractors, and associated liquidated damages and may be subject to debarment, as appropriate.

5. Anti-retaliation. It is unlawful for any person to discharge, demote, intimidate, threaten, restrain, coerce, blacklist, harass, or in any other manner discriminate against, or to cause any person to discharge, demote, intimidate, threaten, restrain, coerce, blacklist, harass, or in any other manner discriminate against, any worker or job applicant for:

a. Notifying any contractor of any conduct which the worker reasonably believes constitutes a violation of the Contract Work Hours and Safety Standards Act (CWHSSA) or its implementing regulations in this part;

b. Filing any complaint, initiating or causing to be initiated any proceeding, or otherwise asserting or seeking to assert on behalf of themselves or others any right or protection under CWHSSA or this part;

c. Cooperating in any investigation or other compliance action, or testifying in any proceeding under CWHSSA or this part; or

d. Informing any other person about their rights under CWHSSA or this part.

V. SUBLETTING OR ASSIGNING THE CONTRACT

This provision is applicable to all Federal-aid construction contracts on the National Highway System pursuant to 23 CFR 635.116.

1. The contractor shall perform with its own organization contract work amounting to not less than 30 percent (or a greater percentage if specified elsewhere in the contract) of the total original contract price, excluding any specialty items designated by the contracting agency. Specialty items may be performed by subcontract and the amount of any such specialty items performed may be deducted from the total original contract price before computing the amount of work required to be performed by the contractor's own organization (23 CFR 635.116).

a. The term “perform work with its own organization” in paragraph 1 of Section VI refers to workers employed or leased by the prime contractor, and equipment owned or rented by the prime contractor, with or without operators. Such term does not include employees or equipment of a subcontractor or lower tier subcontractor, agents of the prime contractor, or any other assignees. The term may include payments for the costs of hiring leased employees from an employee leasing firm meeting all relevant Federal and State regulatory requirements. Leased employees may only be included in this term if the prime contractor meets all of the following conditions: (based on longstanding interpretation)

(1) the prime contractor maintains control over the supervision of the day-to-day activities of the leased employees;
(2) the prime contractor remains responsible for the quality of the work of the leased employees;
(3) the prime contractor retains all power to accept or exclude individual employees from work on the project; and
(4) the prime contractor remains ultimately responsible for the payment of predetermined minimum wages, the submission of payrolls, statements of compliance and all other Federal regulatory requirements.

b. "Specialty Items" shall be construed to be limited to work that requires highly specialized knowledge, abilities, or equipment not ordinarily available in the type of contracting organizations qualified and expected to bid or propose on the contract as a whole and in general are to be limited to minor components of the overall contract. 23 CFR 635.102.

2. Pursuant to 23 CFR 635.116(a), the contract amount upon which the requirements set forth in paragraph 1. of this section is computed includes the cost of material and manufactured products which are to be purchased or produced by the contractor under the contract provisions.

3. Pursuant to 23 CFR 635.116(c), the contractor shall furnish (a) a competent superintendent or supervisor who is employed by the firm, has full authority to direct performance of the work in accordance with the contract requirements, and is in charge of all construction operations (regardless of who performs the work) and (b) such other of its own organizational resources (supervision, management, and engineering services) as the contracting officer determines is necessary to assure the performance of the contract.

4. No portion of the contract shall be sublet, assigned or otherwise disposed of except with the written consent of the contracting officer, or authorized representative, and such consent when given shall not be construed to relieve the contractor of any responsibility for the fulfillment of the contract. Written consent will be given only after the contracting agency has assured that each subcontract is evidenced in writing and that it contains all pertinent provisions and requirements of the prime contract. (based on long-standing interpretation of 23 CFR 635.116).

5. The 30-percent self-performance requirement of paragraph (1) is not applicable to design-build contracts; however,

contracting agencies may establish their own self-performance requirements. 23 CFR 635.116(d).

VI. SAFETY: ACCIDENT PREVENTION

This provision is applicable to all Federal-aid construction contracts and to all related subcontracts.

1. In the performance of this contract the contractor shall comply with all applicable Federal, State, and local laws governing safety, health, and sanitation (23 CFR Part 635). The contractor shall provide all safeguards, safety devices and protective equipment and take any other needed actions as it determines, or as the contracting officer may determine, to be reasonably necessary to protect the life and health of employees on the job and the safety of the public and to protect property in connection with the performance of the work covered by the contract. 23 CFR 635.108.

2. It is a condition of this contract, and shall be made a condition of each subcontract, which the contractor enters into pursuant to this contract, that the contractor and any subcontractor shall not permit any employee, in performance of the contract, to work in surroundings or under conditions which are unsanitary, hazardous or dangerous to his/her health or safety, as determined under construction safety and health standards (29 CFR Part 1926) promulgated by the Secretary of Labor, in accordance with Section 107 of the Contract Work Hours and Safety Standards Act (40 U.S.C. 3704). 29 CFR 1926.10.

3. Pursuant to 29 CFR 1926.3, it is a condition of this contract that the Secretary of Labor or authorized representative thereof, shall have right of entry to any site of contract performance to inspect or investigate the matter of compliance with the construction safety and health standards and to carry out the duties of the Secretary under Section 107 of the Contract Work Hours and Safety Standards Act (40 U.S.C. 3704).

VII. FALSE STATEMENTS CONCERNING HIGHWAY PROJECTS

This provision is applicable to all Federal-aid construction contracts and to all related subcontracts.

In order to assure high quality and durable construction in conformity with approved plans and specifications and a high degree of reliability on statements and representations made by engineers, contractors, suppliers, and workers on Federal-aid highway projects, it is essential that all persons concerned with the project perform their functions as carefully, thoroughly, and honestly as possible. Willful falsification, distortion, or misrepresentation with respect to any facts related to the project is a violation of Federal law. To prevent any misunderstanding regarding the seriousness of these and similar acts, Form FHWA-1022 shall be posted on each Federal-aid highway project (23 CFR Part 635) in one or more places where it is readily available to all persons concerned with the project:

18 U.S.C. 1020 reads as follows:

"Whoever, being an officer, agent, or employee of the United States, or of any State or Territory, or whoever, whether a person, association, firm, or corporation, knowingly makes any false statement, false representation, or false report as to the character, quality, quantity, or cost of the material used or to be used, or the quantity or quality of the work performed or to be performed, or the cost thereof in connection with the submission of plans, maps, specifications, contracts, or costs of construction on any highway or related project submitted for approval to the Secretary of Transportation; or

Whoever knowingly makes any false statement, false representation, false report or false claim with respect to the character, quality, quantity, or cost of any work performed or to be performed, or materials furnished or to be furnished, in connection with the construction of any highway or related project approved by the Secretary of Transportation; or

Whoever knowingly makes any false statement or false representation as to material fact in any statement, certificate, or report submitted pursuant to provisions of the Federal-aid Roads Act approved July 11, 1916, (39 Stat. 355), as amended and supplemented;

Shall be fined under this title or imprisoned not more than 5 years or both."

VIII. IMPLEMENTATION OF CLEAN AIR ACT AND FEDERAL WATER POLLUTION CONTROL ACT (42 U.S.C. 7606; 2 CFR 200.88; EO 11738)

This provision is applicable to all Federal-aid construction contracts in excess of $150,000 and to all related subcontracts. 48 CFR 2.101; 2 CFR 200.327.

By submission of this bid/proposal or the execution of this contract or subcontract, as appropriate, the bidder, proposer, Federal-aid construction contractor, subcontractor, supplier, or vendor agrees to comply with all applicable standards, orders or regulations issued pursuant to the Clean Air Act (42 U.S.C. 7401-7671q) and the Federal Water Pollution Control Act, as amended (33 U.S.C. 1251-1387). Violations must be reported to the Federal Highway Administration and the Regional Office of the Environmental Protection Agency. 2 CFR Part 200, Appendix II.

The contractor agrees to include or cause to be included the requirements of this Section in every subcontract, and further agrees to take such action as the contracting agency may direct as a means of enforcing such requirements. 2 CFR 200.327.

IX. CERTIFICATION REGARDING DEBARMENT, SUSPENSION, INELIGIBILITY AND VOLUNTARY EXCLUSION

This provision is applicable to all Federal-aid construction contracts, design-build contracts, subcontracts, lower-tier subcontracts, purchase orders, lease agreements, consultant contracts or any other covered transaction requiring FHWA approval or that is estimated to cost $25,000 or more – as defined in 2 CFR Parts 180 and 1200. 2 CFR 180.220 and 1200.220.

1. Instructions for Certification – First Tier Participants:

a. By signing and submitting this proposal, the prospective first tier participant is providing the certification set out below.

b. The inability of a person to provide the certification set out below will not necessarily result in denial of participation in this

covered transaction. The prospective first tier participant shall submit an explanation of why it cannot provide the certification set out below. The certification or explanation will be considered in connection with the department or agency's determination whether to enter into this transaction. However, failure of the prospective first tier participant to furnish a certification or an explanation shall disqualify such a person from participation in this transaction. 2 CFR 180.320.

c. The certification in this clause is a material representation of fact upon which reliance was placed when the contracting agency determined to enter into this transaction. If it is later determined that the prospective participant knowingly rendered an erroneous certification, in addition to other remedies available to the Federal Government, the contracting agency may terminate this transaction for cause of default. 2 CFR 180.325.

d. The prospective first tier participant shall provide immediate written notice to the contracting agency to whom this proposal is submitted if any time the prospective first tier participant learns that its certification was erroneous when submitted or has become erroneous by reason of changed circumstances. 2 CFR 180.345 and 180.350.

e. The terms "covered transaction," "debarred," "suspended," "ineligible," "participant," "person," "principal," and "voluntarily excluded," as used in this clause, are defined in 2 CFR Parts 180, Subpart I, 180.900-180.1020, and 1200. “First Tier Covered Transactions” refers to any covered transaction between a recipient or subrecipient of Federal funds and a participant (such as the prime or general contract). “Lower Tier Covered Transactions” refers to any covered transaction under a First Tier Covered Transaction (such as subcontracts). “First Tier Participant” refers to the participant who has entered into a covered transaction with a recipient or subrecipient of Federal funds (such as the prime or general contractor). “Lower Tier Participant” refers any participant who has entered into a covered transaction with a First Tier Participant or other Lower Tier Participants (such as subcontractors and suppliers).

f. The prospective first tier participant agrees by submitting this proposal that, should the proposed covered transaction be entered into, it shall not knowingly enter into any lower tier covered transaction with a person who is debarred, suspended, declared ineligible, or voluntarily excluded from participation in this covered transaction, unless authorized by the department or agency entering into this transaction. 2 CFR 180.330.

g. The prospective first tier participant further agrees by submitting this proposal that it will include the clause titled "Certification Regarding Debarment, Suspension, Ineligibility and Voluntary Exclusion-Lower Tier Covered Transactions," provided by the department or contracting agency, entering into this covered transaction, without modification, in all lower tier covered transactions and in all solicitations for lower tier covered transactions exceeding the $25,000 threshold. 2 CFR 180.220 and 180.300.

h. A participant in a covered transaction may rely upon a certification of a prospective participant in a lower tier covered transaction that is not debarred, suspended, ineligible, or voluntarily excluded from the covered transaction, unless it knows that the certification is erroneous. 2 CFR 180.300; 180.320, and 180.325. A participant is responsible for ensuring that its principals are not suspended, debarred, or otherwise ineligible to participate in covered transactions. 2 CFR 180.335. To verify the eligibility of its principals, as well as the eligibility of any lower tier prospective participants, each participant may, but is not required to, check the System for Award Management website (https://www.sam.gov/). 2 CFR 180.300, 180.320, and 180.325.

i. Nothing contained in the foregoing shall be construed to require the establishment of a system of records in order to render in good faith the certification required by this clause. The knowledge and information of the prospective participant is not required to exceed that which is normally possessed by a prudent person in the ordinary course of business dealings.

j. Except for transactions authorized under paragraph (f) of these instructions, if a participant in a covered transaction knowingly enters into a lower tier covered transaction with a person who is suspended, debarred, ineligible, or voluntarily excluded from participation in this transaction, in addition to other remedies available to the Federal Government, the department or agency may terminate this transaction for cause or default. 2 CFR 180.325.

* * * * *

2. Certification Regarding Debarment, Suspension, Ineligibility and Voluntary Exclusion – First Tier Participants:

a. The prospective first tier participant certifies to the best of its knowledge and belief, that it and its principals:

(1) Are not presently debarred, suspended, proposed for debarment, declared ineligible, or voluntarily excluded from participating in covered transactions by any Federal department or agency, 2 CFR 180.335;.

(2) Have not within a three-year period preceding this proposal been convicted of or had a civil judgment rendered against them for commission of fraud or a criminal offense in connection with obtaining, attempting to obtain, or performing a public (Federal, State, or local) transaction or contract under a public transaction; violation of Federal or State antitrust statutes or commission of embezzlement, theft, forgery, bribery, falsification or destruction of records, making false statements, or receiving stolen property, 2 CFR 180.800;

(3) Are not presently indicted for or otherwise criminally or civilly charged by a governmental entity (Federal, State or local) with commission of any of the offenses enumerated in paragraph (a)(2) of this certification, 2 CFR 180.700 and 180.800; and

(4) Have not within a three-year period preceding this application/proposal had one or more public transactions (Federal, State or local) terminated for cause or default. 2 CFR 180.355(d).

(5) Are not a corporation that has been convicted of a felony violation under any Federal law within the two-year period preceding this proposal (USDOT Order 4200.6 implementing appropriations act requirements); and

(6) Are not a corporation with any unpaid Federal tax liability that has been assessed, for which all judicial and administrative remedies have been exhausted, or have lapsed, and that is not being paid in a timely manner pursuant to an agreement with the authority responsible for collecting the tax liability (USDOT Order 4200.6 implementing appropriations act requirements).

b. Where the prospective participant is unable to certify to any of the statements in this certification, such prospective participant should attach an explanation to this proposal. 2 CFR 180.335 and 180.340.

* * * * *

3. **Instructions for Certification - Lower Tier Participants:**

(Applicable to all subcontracts, purchase orders, and other lower tier transactions requiring prior FHWA approval or estimated to cost $25,000 or more - 2 CFR Parts 180 and 1200). 2 CFR 180.220 and 1200.220.

a. By signing and submitting this proposal, the prospective lower tier participant is providing the certification set out below.

b. The certification in this clause is a material representation of fact upon which reliance was placed when this transaction was entered into. If it is later determined that the prospective lower tier participant knowingly rendered an erroneous certification, in addition to other remedies available to the Federal Government, the department, or agency with which this transaction originated may pursue available remedies, including suspension and/or debarment.

c. The prospective lower tier participant shall provide immediate written notice to the person to which this proposal is submitted if at any time the prospective lower tier participant learns that its certification was erroneous by reason of changed circumstances. 2 CFR 180.365.

d. The terms "covered transaction," "debarred," "suspended," "ineligible," "participant," "person," "principal," and "voluntarily excluded," as used in this clause, are defined in 2 CFR Parts 180, Subpart I, 180.900 – 180.1020, and 1200. You may contact the person to which this proposal is submitted for assistance in obtaining a copy of those regulations. “First Tier Covered Transactions” refers to any covered transaction between a recipient or subrecipient of Federal funds and a participant (such as the prime or general contract). “Lower Tier Covered Transactions” refers to any covered transaction under a First Tier Covered Transaction (such as subcontracts). “First Tier Participant” refers to the participant who has entered into a covered transaction with a recipient or subrecipient of Federal funds (such as the prime or general contractor). “Lower Tier Participant” refers any participant who has entered into a covered transaction with a First Tier Participant or other Lower Tier Participants (such as subcontractors and suppliers).

e. The prospective lower tier participant agrees by submitting this proposal that, should the proposed covered transaction be entered into, it shall not knowingly enter into any lower tier covered transaction with a person who is debarred, suspended, declared ineligible, or voluntarily excluded from participation in this covered transaction, unless authorized by the department or agency with which this transaction originated. 2 CFR 1200.220 and 1200.332.

f. The prospective lower tier participant further agrees by submitting this proposal that it will include this clause titled "Certification Regarding Debarment, Suspension, Ineligibility and Voluntary Exclusion-Lower Tier Covered Transaction," without modification, in all lower tier covered transactions and in all solicitations for lower tier covered transactions exceeding the $25,000 threshold. 2 CFR 180.220 and 1200.220.

g. A participant in a covered transaction may rely upon a certification of a prospective participant in a lower tier covered transaction that is not debarred, suspended, ineligible, or voluntarily excluded from the covered transaction, unless it knows that the certification is erroneous. A participant is responsible for ensuring that its principals are not suspended, debarred, or otherwise ineligible to participate in covered transactions. To verify the eligibility of its principals, as well as the eligibility of any lower tier prospective participants, each participant may, but is not required to, check the System for Award Management website (https://www.sam.gov/), which is compiled by the General Services Administration. 2 CFR 180.300, 180.320, 180.330, and 180.335.

h. Nothing contained in the foregoing shall be construed to require establishment of a system of records in order to render in good faith the certification required by this clause. The knowledge and information of participant is not required to exceed that which is normally possessed by a prudent person in the ordinary course of business dealings.

i. Except for transactions authorized under paragraph e of these instructions, if a participant in a covered transaction knowingly enters into a lower tier covered transaction with a person who is suspended, debarred, ineligible, or voluntarily excluded from participation in this transaction, in addition to other remedies available to the Federal Government, the department or agency with which this transaction originated may pursue available remedies, including suspension and/or debarment. 2 CFR 180.325.

* * * * *

4. Certification Regarding Debarment, Suspension, Ineligibility and Voluntary Exclusion--Lower Tier Participants:

a. The prospective lower tier participant certifies, by submission of this proposal, that neither it nor its principals:

(1) is presently debarred, suspended, proposed for debarment, declared ineligible, or voluntarily excluded from participating in covered transactions by any Federal department or agency, 2 CFR 180.355;

(2) is a corporation that has been convicted of a felony violation under any Federal law within the two-year period preceding this proposal (USDOT Order 4200.6 implementing appropriations act requirements); and

(3) is a corporation with any unpaid Federal tax liability that has been assessed, for which all judicial and administrative remedies have been exhausted, or have lapsed, and that is not being paid in a timely manner pursuant to an agreement with the authority responsible for collecting the tax liability. (USDOT Order 4200.6 implementing appropriations act requirements)

b. Where the prospective lower tier participant is unable to certify to any of the statements in this certification, such prospective participant should attach an explanation to this proposal.

* * * * *

X. CERTIFICATION REGARDING USE OF CONTRACT FUNDS FOR LOBBYING

This provision is applicable to all Federal-aid construction contracts and to all related subcontracts which exceed $100,000. 49 CFR Part 20, App. A.

1. The prospective participant certifies, by signing and submitting this bid or proposal, to the best of his or her knowledge and belief, that:

a. No Federal appropriated funds have been paid or will be paid, by or on behalf of the undersigned, to any person for influencing or attempting to influence an officer or employee of any Federal agency, a Member of Congress, an officer or employee of Congress, or an employee of a Member of Congress in connection with the awarding of any Federal contract, the making of any Federal grant, the making of any Federal loan, the entering into of any cooperative agreement, and the extension, continuation, renewal, amendment, or modification of any Federal contract, grant, loan, or cooperative agreement.

b. If any funds other than Federal appropriated funds have been paid or will be paid to any person for influencing or attempting to influence an officer or employee of any Federal agency, a Member of Congress, an officer or employee of Congress, or an employee of a Member of Congress in connection with this Federal contract, grant, loan, or cooperative agreement, the undersigned shall complete and submit Standard Form-LLL, "Disclosure Form to Report Lobbying," in accordance with its instructions.

2. This certification is a material representation of fact upon which reliance was placed when this transaction was made or entered into. Submission of this certification is a prerequisite for making or entering into this transaction imposed by 31 U.S.C. 1352. Any person who fails to file the required certification shall be subject to a civil penalty of not less than $10,000 and not more than $100,000 for each such failure.

3. The prospective participant also agrees by submitting its bid or proposal that the participant shall require that the language of this certification be included in all lower tier subcontracts, which exceed $100,000 and that all such recipients shall certify and disclose accordingly.

XI. USE OF UNITED STATES-FLAG VESSELS:

This provision is applicable to all Federal-aid construction contracts, design-build contracts, subcontracts, lower-tier subcontracts, purchase orders, lease agreements, or any other covered transaction. 46 CFR Part 381.

This requirement applies to material or equipment that is acquired for a specific Federal-aid highway project. 46 CFR 381.7. It is not applicable to goods or materials that come into inventories independent of an FHWA funded-contract.

When oceanic shipments (or shipments across the Great Lakes) are necessary for materials or equipment acquired for a specific Federal-aid construction project, the bidder, proposer, contractor, subcontractor, or vendor agrees:

1. To utilize privately owned United States-flag commercial vessels to ship at least 50 percent of the gross tonnage (computed separately for dry bulk carriers, dry cargo liners, and tankers) involved, whenever shipping any equipment, material, or commodities pursuant to this contract, to the extent such vessels are available at fair and reasonable rates for United States-flag commercial vessels. 46 CFR 381.7.

2. To furnish within 20 days following the date of loading for shipments originating within the United States or within 30 working days following the date of loading for shipments originating outside the United States, a legible copy of a rated, ‘on-board’ commercial ocean bill-of-lading in English for each shipment of cargo described in paragraph (b)(1) of this section to both the Contracting Officer (through the prime contractor in the case of subcontractor bills-of-lading) and to the Office of Cargo and Commercial Sealift (MAR-620), Maritime Administration, Washington, DC 20590. (MARAD requires copies of the ocean carrier's (master) bills of lading, certified onboard, dated, with rates and charges. These bills of lading may contain business sensitive information and therefore may be submitted directly to MARAD by the Ocean Transportation Intermediary on behalf of the contractor). 46 CFR 381.7.

ATTACHMENT A - EMPLOYMENT AND MATERIALS PREFERENCE FOR APPALACHIAN DEVELOPMENT HIGHWAY SYSTEM OR APPALACHIAN LOCAL ACCESS ROAD CONTRACTS (40 U.S.C. sections 14501(d) and 14701) and the Appalachian Regional Commission Code as authorized under 40 U.S.C. section 14302)
This provision is applicable to all Federal-aid projects funded under the Appalachian Regional Development Act of 1965.

1. During the performance of this contract, the contractor undertaking to do work which is, or reasonably may be, done as on-site work, shall give preference to qualified persons who regularly reside in the labor area as designated by the DOL wherein the contract work is situated, or the subregion, or the Appalachian counties of the State wherein the contract work is situated, except:

a. To the extent that qualified persons regularly residing in the area are not available.

b. For the reasonable needs of the contractor to employ supervisory or specially experienced personnel necessary to assure an efficient execution of the contract work.

c. For the obligation of the contractor to offer employment to present or former employees as the result of a lawful collective bargaining contract, provided that the number of nonresident persons employed under this subparagraph (1c) shall not exceed 20 percent of the total number of employees employed by the contractor on the contract work, except as provided in subparagraph (4) below.

2. The contractor shall place a job order with the State Employment Service indicating (a) the classifications of the laborers, mechanics and other employees required to perform the contract work, (b) the number of employees required in each classification, (c) the date on which the participant estimates such employees will be required, and (d) any other pertinent information required by the State Employment Service to complete the job order form. The job order may be placed with the State Employment Service in writing or by telephone. If during the course of the contract work, the information submitted by the contractor in the original job order is substantially modified, the participant shall promptly notify the State Employment Service.

3. The contractor shall give full consideration to all qualified job applicants referred to him by the State Employment Service. The contractor is not required to grant employment to any job applicants who, in his opinion, are not qualified to perform the classification of work required.

4. If, within one week following the placing of a job order by the contractor with the State Employment Service, the State Employment Service is unable to refer any qualified job applicants to the contractor, or less than the number requested, the State Employment Service will forward a certificate to the contractor indicating the unavailability of applicants. Such certificate shall be made a part of the contractor's permanent project records. Upon receipt of this certificate, the contractor may employ persons who do not normally reside in the labor area to fill positions covered by the certificate, notwithstanding the provisions of subparagraph (1c) above.

5. The provisions of 40 U.S.C. 14501 allow the contracting agency to provide a contractual preference for the use of mineral resource materials native to the Appalachian region.

6. The contractor shall include the provisions of Sections 1 through 4 of this Attachment A in every subcontract for work which is, or reasonably may be, done as on-site work.

STANDARD SPECIAL PROVISION

ON-THE-JOB TRAINING

(10-16-07) (Rev. 6-16-26) Z-10

Description

The North Carolina Department of Transportation administers a custom version of the Federal On-the-Job Training (OJT) Program, commonly referred to as the Alternative OJT Program. All Contractors will be automatically placed in the Alternative OJT Program.

The Alternate OJT Program will allow a Contractor to train employees on Federal, State and privately funded projects located in North Carolina. However, priority shall be given to training employees on NCDOT Federal-Aid funded projects.

On the Job Training shall meet the requirements of 23 CFR 230.107 (b), 23 USC – Section 140, this special provision and the NCDOT On-the-Job Training Program Manual.

Minorities and Women

Developing, training and upgrading of minorities and women toward journeyman level status is a primary objective of this special provision. Accordingly, the Contractor shall make every effort to enroll minority and women as trainees to the extent that such persons are available within a reasonable area of recruitment. This training commitment is not intended, and shall not be used, to discriminate against any applicant for training, whether a member of a minority group or not.

Assigning Training Goals

The Department, through the OJT Program Unit, will assign annual training goals based on the Contractor's activity over the past three years' on federal projects with the Department. At the beginning of each year, all eligible Contractors will be contacted by the Department to determine the number of trainees that will be assigned for the upcoming calendar year. At that time, the Contractor shall enter into an agreement with the Department to implement a self-imposed on-the-job training program for the calendar year. This agreement will specify the annual training goals agreed upon by both parties. The number of training assignments may range from 1 to 15 per Contractor per calendar year, unless a higher number is agreed to by the Contractor. The Contractor shall sign an agreement committing to fulfill their annual goal for the year.

Training Classifications

The Contractor shall provide on-the-job training aimed at developing full journeyman level workers in the construction craft/operator positions.

The Department has established common training classifications and their respective training requirements that may be used by the Contractors. However, the classifications established are not all-inclusive. Where the training is oriented toward construction applications, training will be allowed in lower-level management positions such as office engineers and estimators. Contractors shall submit new classifications for specific job functions that their employees are performing.

The Department will review and recommend for acceptance to FHWA the new classifications proposed by contractors, if applicable. New classifications shall meet the following requirements:

Proposed training classifications are reasonable and realistic based on the job skill classification needs, and

The number of training hours specified in the training classification is consistent with common practices and provides enough time for the trainee to obtain journeyman level status.

The Contractor may allow trainees to be trained by a subcontractor provided that the Contractor retains primary responsibility for meeting the training and this special provision is made applicable to the subcontract. However, only the Contractor will receive credit towards the annual goal for the trainee.

Where feasible, 25 percent of trainees in each occupation shall be in their first year of training. The number of trainees shall be distributed among the work classifications on the basis of the Contractor's needs and the availability of journeymen in the various classifications within a reasonable area of recruitment.

No employee shall be employed as a trainee in any classification in which they have successfully completed a training course leading to journeyman level status or in which they have been employed as a journeyman.

Records and Reports

The Contractor shall maintain enrollment, monthly and completion reports documenting company compliance under these contract documents. These documents and any other information as requested shall be submitted to the OJT Program Manager.

Upon completion and graduation of the program, the Contractor shall provide each trainee with a certification Certificate showing the type and length of training satisfactorily completed.

Trainee Interviews

All trainees enrolled in the program will receive at minimum an initial and Trainee/Post graduate interview conducted by the OJT program staff.

Trainee Wages

Contractors shall compensate trainees on a graduating pay scale based upon a percentage of the prevailing minimum journeyman wages (Davis-Bacon Act). Minimum pay shall be as follows:

60 percent	of the journeyman wage for the first half of the training period
75 percent	of the journeyman wage for the third quarter of the training period
90 percent	of the journeyman wage for the last quarter of the training period

In no instance shall a trainee be paid less than the local minimum wage. The Contractor shall adhere to the minimum hourly wage rate that will satisfy both the NC Department of Labor (NCDOL) and the Department.

Achieving or Failing to Meet Training Goals

The Contractor will be credited for each trainee currently enrolled or becomes enrolled in an approved program and who receives training for at least 50 percent of the specific program requirement. Trainees will be allowed to be transferred between projects if required by the Contractor's scheduled workload to meet training goals.

If a Contractor fails to attain their training assignments for the calendar year, they may be taken off the NCDOT's Bidders List.

Measurement and Payment

No compensation will be made for providing required training in accordance with these contract documents.

STANDARD SPECIAL PROVISION
MINIMUM WAGES
GENERAL DECISION NC20260090 05/18/2026 NC90

Z-090

Date: May 18, 2026

General Decision Number: NC20260090 05/18/2026 NC90

Superseded General Decision Numbers: NC20250090

State: North Carolina

Construction Type: HIGHWAY

COUNTIES:

Brunswick	Greene	Onslow
Cumberland	Hoke	Pender
Currituck	Johnston	Pitt
Edgecombe	Nash	Wake
Franklin	New Hanover	Wayne

HIGHWAY CONSTRUCTION PROJECTS (excluding tunnels, building structures in rest area projects & railroad construction; bascule, suspension & spandrel arch bridges designed for commercial navigation, bridges involving marine construction; and other major bridges).

Modification Number	Publication Date
0	01/02/2026
1	05/18/2026

SUNC2014-005 11/17/2014

	Rates	Fringes
TRUCK DRIVER (GVWR of 26,001 Lbs or Greater)	12.37	
TRUCK DRIVER (GVWR of 26,000 Lbs or Less)	11.12	
POWER EQUIPMENT OPERATORS (Milling Machine)	15.36	
POWER EQUIPMENT OPERATORS (Mechanic)	17.55	
POWER EQUIPMENT OPERATORS (Tack Truck/Distributor Operator)	14.52	
POWER EQUIPMENT OPERATORS (Slip Form Machine)	16.50	
POWER EQUIPMENT OPERATORS (Scraper Rough)	11.35	
POWER EQUIPMENT OPERATORS (Scraper Finish)	12.71	
POWER EQUIPMENT OPERATORS (Roller Other)	11.36	
POWER EQUIPMENT OPERATORS (Roller Asphalt Finish)	13.85	
POWER EQUIPMENT OPERATORS (Roller Asphalt Breakdown)	12.45	
POWER EQUIPMENT OPERATORS (Paver Concrete)	18.20	
POWER EQUIPMENT OPERATORS (Paver Asphalt)	15.59	
POWER EQUIPMENT OPERATORS (Pavement Marking Equipment)	12.11	
POWER EQUIPMENT OPERATORS (Oiler/Greaser)	13.55	
POWER EQUIPMENT OPERATORS (Off-Road Hauler/Water Tanker)	11.36	
POWER EQUIPMENT OPERATORS (Material Transfer Vehicle (Shuttle Buggy))	15.18	
POWER EQUIPMENT OPERATORS (Loader Greater Than 2 Cubic Yards)	14.14	
POWER EQUIPMENT OPERATORS (Loader 2 Cubic Yards or Less)	13.76	
POWER EQUIPMENT OPERATORS (Grader/Blade Rough)	14.62	
POWER EQUIPMENT OPERATORS (Grader/Blade Fine)	18.47	
POWER EQUIPMENT OPERATORS (Excavator Rough)	14.00	

	Rates	Fringes
POWER EQUIPMENT OPERATORS (Excavator Fine)	16.60	
POWER EQUIPMENT OPERATORS (Drill Operator Structure)	21.14	
POWER EQUIPMENT OPERATORS (Drill Operator Rock)	14.38	
POWER EQUIPMENT OPERATORS (Crane Rough/All-Terrain)	20.67	
POWER EQUIPMENT OPERATORS (Crane Other)	20.08	
POWER EQUIPMENT OPERATORS (Crane Boom Trucks)	20.54	
POWER EQUIPMENT OPERATORS (Concrete Grinder/Groover)	20.34	2.30
POWER EQUIPMENT OPERATORS (Bulldozer Rough)	14.34	
POWER EQUIPMENT OPERATORS (Bulldozer Fine)	17.04	
POWER EQUIPMENT OPERATORS (Asphalt Broom Tractor)	11.85	
PAINTER (Bridge)	24.57	
LABORER (Pipelayer)	12.17	
LABORER (Common or General)	10.20	
LABORER (Traffic Signal/Lighting Installer)	14.89	
LABORER (Guardrail/Fence Installer)	12.87	
LABORER (Cement Mason/Concrete Finisher Tender)	12.54	
LABORER (Carpenter Tender)	12.88	
LABORER (Asphalt Screed/Jackman)	14.33	
LABORER (Asphalt Raker and Spreader)	12.46	
IRONWORKER	16.02	
ELECTRICIAN (Telecommunications Technician)	16.79	.63
ELECTRICIAN (Electrician)	17.97	
CEMENT MASON/CONCRETE FINISHER	14.48	
CARPENTER	13.72	
BLASTER	21.04	

Welders – Receive rate prescribed for craft performing operation to which welding is incidental.

Note: Executive Order (EO) 13706, Establishing Paid Sick Leave for Federal Contractors applies to all contracts subject to the Davis-Bacon Act for which the contract is awarded (and any solicitation was issued) on or after January 1, 2017. If this contract is covered by the EO, the contractor must provide employees with 1 hour of paid sick leave for every 30 hours they work, up to 56 hours of paid sick leave each year. Employees must be permitted to use paid sick leave for their own illness, injury or other health-related needs, including preventive care; to assist a family member (or person who is like family to the employee) who is ill, injured, or has other health-related needs, including preventive care; or for reasons resulting from, or to assist a family member (or person who is like family to the employee) who is a victim of, domestic violence, sexual assault, or stalking. Additional information on contractor requirements and worker protections under the EO is available at https://www.dol.gov/agencies/whd/government-contracts.

Note: Executive Order 13658 generally applies to contracts subject to the Davis-Bacon Act that were awarded on or between January 1, 2015 and January 29, 2022, and that have not been renewed or extended on or after January 30, 2022. Executive Order 13658 does not apply to contracts subject only to the Davis-Bacon Related Acts regardless of when they were awarded. If a contract is subject to Executive Order 13658, the contractor must pay all covered workers at least $13.65 per hour (or the applicable wage rate listed on this wage determination, if it is higher) for all hours spent performing on the contract from May 11, 2026, through December 31, 2026. The applicable Executive Order minimum wage rate will be adjusted annually. Additional information on contractor requirements and worker protections under Executive Order 13658 is available at www.dol.gov/whd/govcontracts.

Unlisted classifications needed for work not included within the scope of the classifications listed may be added after award only as provided in the labor standards contract clauses (29 CFR 5.5(a)(1)(iii)).

The body of each wage determination lists the classification and wage rates that have been found to be prevailing for the type(s) of construction and geographic area covered by the wage determination. The classifications are listed in alphabetical order under rate identifiers indicating whether the particular rate is a union rate (current union negotiated rate), a survey rate, a weighted union average rate, a state adopted rate, or a supplemental classification rate.

Union Rate Identifiers

A four-letter identifier beginning with characters other than "SU", "UAVG", "SA", or "SC" denotes that a union rate was prevailing for that classification in the survey. Example: PLUM0198-005 07/01/2024. PLUM is an identifier of the union whose collectively bargained rate prevailed in the survey for this classification, which in this example would be Plumbers. 0198 indicates the local union number or district council number where applicable, i.e., Plumbers Local 0198. The next number, 005 in the example, is an internal number used in processing the wage determination. The date, 07/01/2024 in the example, is the effective date of the most current negotiated rate.

Union prevailing wage rates are updated to reflect all changes over time that are reported to WHD in the rates in the collective bargaining agreement (CBA) governing the classification.

Union Average Rate Identifiers

The UAVG identifier indicates that no single rate prevailed for those classifications, but that 100% of the data reported for the classifications reflected union rates. EXAMPLE: UAVG-OH-0010 01/01/2024. UAVG indicates that the rate is a weighted union average rate. OH indicates the State of Ohio. The next number, 0010 in the example, is an internal number used in producing the wage determination. The date, 01/01/2024 in the example, indicates the date the wage determination was updated to reflect the most current union average rate.

A UAVG rate will be updated once a year, usually in January, to reflect a weighted average of the current rates in the collective bargaining agreements on which the rate is based.

Survey Rate Identifiers

The "SU" identifier indicates that either a single non-union rate prevailed (as defined in 29 CFR 1.2) for this classification in the survey or that the rate was derived by computing a weighted average rate based on all the rates reported in the survey for that classification. As a weighted average rate includes all rates reported in the survey, it may include both union and non-union rates. Example: SUFL2022-007 6/27/2024. SU indicates the rate is a single non-union prevailing rate or a weighted average of survey data for that classification. FL indicates the State of Florida. 2022 is the year of survey on which these classifications and rates are based. The next number, 007 in the example, is an internal number used in producing the wage determination. The date, 6/27/2024 in the example, indicates the survey completion date for the classifications and rates under that identifier.

"SU" wage rates typically remain in effect until a new survey is conducted. However, the Wage and Hour Division (WHD) has the discretion to update such rates under 29 CFR 1.6(c)(1).

State Adopted Rate Identifiers

The "SA" identifier indicates that the classifications and prevailing wage rates set by a state (or local) government were adopted under 29 C.F.R 1.3(g)-(h). Example: SAME2023-007 01/03/2024. SA reflects that the rates are state adopted. ME refers to the State of Maine. 2023 is the year during which the state completed the survey on which the listed classifications and rates are based. The next number, 007 in the example, is an internal number used in producing the wage determination. The date, 01/03/2024 in the example, reflects the date on which the classifications and rates under the "SA" identifier took effect under state law in the state from which the rates were adopted.

WAGE DETERMINATION APPEALS PROCESS

1) Has there been an initial decision in the matter? This can be:

a) a survey underlying a wage determination
b) an existing published wage determination
c) an initial WHD letter setting forth a position on a wage determination matter
d) an initial conformance (additional classification and rate) determination

On survey related matters, initial contact, including requests for summaries of surveys, should be directed to the WHD Branch of Wage Surveys. Requests can be submitted via email to davisbaconinfo@dol.gov or by mail to:

Branch of Wage Surveys
Wage and Hour Division
U.S. Department of Labor
200 Constitution Avenue, N.W.
Washington, D.C. 20210

Regarding any other wage determination matter such as conformance decisions, requests for initial decisions should be directed to the WHD Branch of Construction Wage Determinations. Requests can be submitted via email to BCWD-Office@dol.gov or by mail to:

Branch of Construction Wage Determinations
Wage and Hour Division
U.S. Department of Labor
200 Constitution Avenue, N.W.
Washington, D.C. 20210

2) If an initial decision has been issued, then any interested party (those affected by the action) that disagrees with the decision can request review and reconsideration from the Wage and Hour Administrator (See 29 CFR Part 1.8 and 29 CFR Part 7). Requests for review and reconsideration can be submitted via mail to dba.reconsideration@dol.gov or by mail to:

Wage and Hour Administrator
U.S. Department of Labor
200 Constitution Avenue, N.W.
Washington, D.C. 20210

The request should be accompanied by a full statement of the interested party's position and any information (wage payment data, project description, area practice material, etc.) that the requestor considers relevant to the issue.

3) If the decision of the Administrator is not favorable, an interested party may appeal directly to the Administrative Review Board (formerly the Wage Appeals Board). Write to:

Administrative Review Board
U.S. Department of Labor
200 Constitution Avenue, N.W.
Washington, D.C. 20210

END OF GENERAL DECISION

LISTING OF DBE SUBCONTRACTORS

Sheet _____ of _____

Firm Name and Address	Item No.	Item Description	* Agreed upon Unit Price	** Dollar Volume of Item
Name Address				
Name Address				
Name Address				
Name Address				
Name Address				
Name Address				
Name Address				

* The Dollar Volume shown in this column shall be the Actual Price Agreed Upon by the Prime Contractor and the DBE subcontractor, and these prices will be used to determine the percentage of the DBE participation in the contract.

** Dollar Volume of DBE Subcontractor Percentage of Total Contract Bid Price:

If firm is a Material Supplier Only, show Dollar Volume as 60% of Agreed Upon Amount from Letter of Intent.

If firm is a Manufacturer, show Dollar Volume as 100% of Agreed Upon Amount from Letter of Intent.

LISTING OF DBE SUBCONTRACTORS

Sheet _____ of _____

Firm Name and Address	Item No.	Item Description	* Agreed upon Unit Price	** Dollar Volume of Item
Name Address				
Name Address				
Name Address				
Name Address				
Name Address				

**** Dollar Volume of DBE Subcontractor $_____**

Percentage of Total Contract Bid Price _____%

*** The Dollar Volume shown in this column shall be the Actual Price Agreed Upon by the Prime Contractor and the DBE subcontractor, and these prices will be used to determine the percentage of the DBE participation in the contract.**

**** Dollar Volume of DBE Subcontractor Percentage of Total Contract Bid Price:**
If firm is a Material Supplier Only, show Dollar Volume as 60% of Agreed Upon Amount from Letter of Intent.
If firm is a Manufacturer, show Dollar Volume as 100% of Agreed Upon Amount from Letter of Intent.

County: JOHNSTON

Line #	Item Number	Sec #	Description	Quantity	Unit Cost	Amount
			ROADWAY ITEMS			
0001	0000100000-N	800	MOBILIZATION	Lump Sum	L.S.	
0002	0000400000-N	801	CONSTRUCTION SURVEYING	Lump Sum	L.S.	
0003	1297000000-E	607	MILLING ASPHALT PAVEMENT, ***" DEPTH (1-1/2")	25,100 SY		
0004	1491000000-E	610	ASPHALT CONC BASE COURSE, TYPE B25.0C	20 TON		
0005	1503000000-E	610	ASPHALT CONC INTERMEDIATE COURSE, TYPE I19.0C	10 TON		
0006	1523000000-E	610	ASPHALT CONC SURFACE COURSE, TYPE S9.5C	2,070 TON		
0007	1575000000-E	620	ASPHALT BINDER FOR PLANT MIX	125 TON		
0008	1693000000-E	654	ASPHALT PLANT MIX, PAVEMENT REPAIR	50 TON		
0009	2549000000-E	846	2'-6" CONCRETE CURB & GUTTER	100 LF		
0010	2591000000-E	848	4" CONCRETE SIDEWALK	200 SY		
0011	2612500000-N	848	REMOVE AND REPLACE CONCRETE CURB RAMPS	105 EA		
0012	2655000000-E	852	5" MONOLITHIC CONCRETE ISLANDS (KEYED IN)	370 SY		
0013	2752000000-E	SP	GENERIC PAVING ITEM REMOVE 2'-6" CURB AND GUTTER	110 LF		
0014	4080200000-E	903	SUPPORTS, STEEL SQUARE TUBE	602 LF		
0015	4102000000-N	904	SIGN ERECTION, TYPE E	61 EA		
0016	4110000000-N	904	SIGN ERECTION, TYPE *** (GROUND MOUNTED) (E)	1 EA		
0017	4155000000-N	907	DISPOSAL OF SIGN SYSTEM, U-CHANNEL	33 EA		

County: JOHNSTON

Line #	Item Number	Sec #	Description	Quantity	Unit Cost	Amount
0018	4238000000-N	907	DISPOSAL OF SIGN, D, E OR F	14 EA		
0019	4273000000-N	907	GENERIC SIGNING ITEM DISPOSAL OF SIGN SYSTEM, SQUARE TUBING	11 EA		
0020	4422000000-N	1120	PORTABLE CHANGEABLE MESSAGE SIGN (SHORT TERM)	210 DAY		
0021	4457000000-N	SP	TEMPORARY TRAFFIC CONTROL	Lump Sum	L.S.	
0022	4510000000-N	1190	LAW ENFORCEMENT	20 HR		
0023	4685000000-E	1205	THERMOPLASTIC PAVEMENT MARKING LINES (4", 90 MILS)	5,433 LF		
0024	4688000000-E	1205	THERMOPLASTIC PAVEMENT MARKING LINES (6", 90 MILS)	11,913 LF		
0025	4695000000-E	1205	THERMOPLASTIC PAVEMENT MARKING LINES (8", 90 MILS)	1,360 LF		
0026	4700000000-E	1205	THERMOPLASTIC PAVEMENT MARKING LINES (12", 90 MILS)	1,784 LF		
0027	4709000000-E	1205	THERMOPLASTIC PAVEMENT MARKING LINES (24", 90 MILS)	4,015 LF		
0028	4720000000-E	1205	THERMOPLASTIC PAVEMENT MARKING CHARACTER (90 MILS)	18 EA		
0029	4725000000-E	1205	THERMOPLASTIC PAVEMENT MARKING SYMBOL (90 MILS)	80 EA		
0030	4810000000-E	1205	PAINT PAVEMENT MARKING LINES (4")	400 LF		
0031	4815000000-E	1205	PAINT PAVEMENT MARKING LINES (6")	8,500 LF		
0032	4820000000-E	1205	PAINT PAVEMENT MARKING LINES (8")	1,020 LF		
0033	4835000000-E	1205	PAINT PAVEMENT MARKING LINES (24")	540 LF		
0034	4847300000-N	1205	IN LANE ROUTE SHIELDS	4 EA		

County: JOHNSTON

Line #	Item Number	Sec #	Description	Quantity	Unit Cost	Amount
0035	4850000000-E	1205	REMOVAL OF PAVEMENT MARKING LINES (4")	3,000 LF		
0036	4860000000-E	1205	REMOVAL OF PAVEMENT MARKING LINES (8")	200 LF		
0037	4870000000-E	1205	REMOVAL OF PAVEMENT MARKING LINES (24")	60 LF		
0038	4875000000-N	1205	REMOVAL OF PAVEMENT MARKING SYMBOLS & CHARACTERS	5 EA		
0039	5255000000-N	1413	PORTABLE LIGHTING	Lump Sum	L.S.	
0040	5540000000-E	1515	6" VALVE	1 EA		
0041	5666000000-N	1515	FIRE HYDRANT	1 EA		
0042	5673000000-E	1515	FIRE HYDRANT LEG	18 LF		
0043	5882000000-N	SP	GENERIC UTILITY ITEM REMOVE AND STOCKPILE FIRE HYDRANT	1 EA		
0044	6117500000-N	SP	CONCRETE WASHOUT STRUCTURE	1 EA		
0045	6132000000-N	SP	GENERIC EROSION CONTROL ITEM PREFABRICATED CONCRETE WASHOUT	1 EA		
0046	7048500000-E	1705	PEDESTRIAN SIGNAL HEAD (16", 1 SECTION W/COUNTDOWN)	24 EA		
0047	7060000000-E	1705	SIGNAL CABLE	6,725 LF		
0048	7120000000-E	1705	VEHICLE SIGNAL HEAD (12", 3 SECTION)	11 EA		
0049	7132000000-E	1705	VEHICLE SIGNAL HEAD (12", 4 SECTION)	3 EA		
0050	7229000000-N	SP	APS DETECTOR STATION	56 EA		
0051	7230000000-N	SP	CENTRAL CONTROL UNIT APS DETECTOR STATION	7 EA		

County: JOHNSTON

Line #	Item Number	Sec #	Description	Quantity	Unit Cost	Amount
0052	7288000000-E	1715	PAVED TRENCHING (***, ***") (1,2")	60 LF		
0053	7288000000-E	1715	PAVED TRENCHING (***, ***") (2,2")	320 LF		
0054	7301000000-E	1715	DIRECTIONAL DRILL (***, ***") (1,2")	450 LF		
0055	7301000000-E	1715	DIRECTIONAL DRILL (***, ***") (2,2")	50 LF		
0056	7324000000-N	1716	JUNCTION BOX (STANDARD SIZE)	7 EA		
0057	7456100000-E	1726	LEAD-IN CABLE (14-2)	5,750 LF		
0058	7636000000-N	1745	SIGN FOR SIGNALS	8 EA		
0059	7642100000-N	1743	TYPE I POST WITH FOUNDATION	22 EA		
0060	7642200000-N	1743	TYPE II PEDESTAL WITH FOUNDATION	11 EA		
0061	7686000000-N	1752	CONDUIT ENTRANCE INTO EXISTING FOUNDATION	6 EA		
0062	7696000000-N	1751	CONTROLLERS WITH CABINET (**********) (TYPE 2070LX, BASE MOUNTED)	2 EA		
0063	7980000000-N	SP	GENERIC SIGNAL ITEM MICROWAVE VEHICLE DETECTOR - MULTIPLE ZONES (PRESENCE)	26 EA		
0064	7980000000-N	SP	GENERIC SIGNAL ITEM NON-INTRUSIVE DETECTION SYSTEM PROCESSOR	7 EA		
0065	7980000000-N	SP	GENERIC SIGNAL ITEM PROTECTIVE COATING FOR TYPE I PUSHBUTTON POST (BLACK)	22 EA		
0066	7980000000-N	SP	GENERIC SIGNAL ITEM PROTECTIVE COATING FOR TYPE II SIGNAL PEDESTAL (BLACK)	11 EA		

Execution of Contract

Contract No: DD00548

County: JOHNSTON COUNTY

ACCEPTED BY THE DEPARTMENT

_____

DIVISION CONTRACT ENGINEER

_____

Date

EXECUTION OF CONTRACT AND BONDS
APPROVED AS TO FORM:

_____

for **DIVISION ENGINEER**

_____

Date